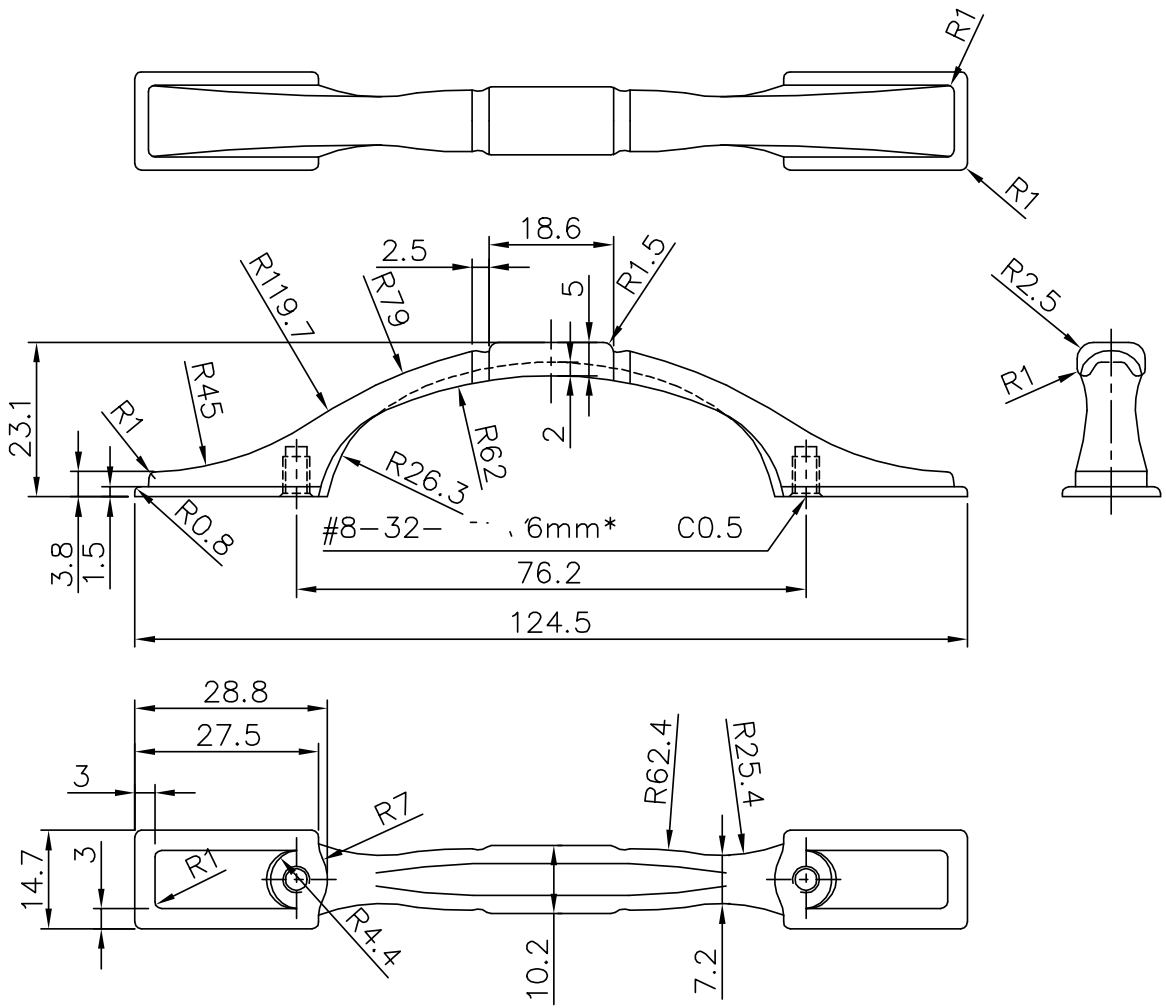

PART NO.	MATERIAL	DATE
9342-10VB-P	**ZINC**	**01-23-2020**
COLLECTION **TRADITIONAL ADVANTAGE ONE**	DESCRIPTION **TRADITIONAL ADVANTAGE ONE 3IN. CC VERONA BRONZE SQUARED END PULL**	PROPRIETARY AND CONFIDENTIAL **THE INFORMATION CONTAINED IN THIS DRAWING IS THE SOLE PROPERTY OF BERENSON CORP. ANY REPRODUCTION IN PART OR AS A WHOLE WITHOUT THE WRITTEN PERMISSION OF BERENSON CORP IS PROHIBITED.**
UNIT OF MEASURE **MILLIMETERS**		

Advantage +Plus by Berenson

2495 Main Street, Suite 111 | Buffalo, NY
Phone: 800.333.0578 | Fax: 716.833.2402
Email: Info@BerensonHardware.com