scilm®
AMERICA
furniture technology for kitchens

WE MAKE THE DIFFERENCE IN THE KITCHEN

EFFECTIVE March 1st 2020
REV. 2020/03/01

EUROPEAN DESIGN

WE MAKE THE
DIFFERENCE
IN THE KITCHEN

scilm®
AMERICA

We offer solutions and harmony.

Scilm has operated for over 40 years in the kitchen component market and supplies the major Italian and European brands. This success has been achieved thanks to technology, taste and the made in Italy style that distinguishes us. We do not only supply components but true systems and accessories suitable to build modern, practical and robust kitchens. We offer quality products for American homes that are quickly assembled, modular and render kitchens practically eternal.

The Scilm skills are focused on molding, plastic extrusion and coating. Scilm is also equipped with advanced CNC equipment for aluminum processing and a modern anodizing plant.

The products presented in this catalog are entirely made in Italy.

Scilm meets the most severe environmental regulations and has the ISO certification for quality and environmental systems.

Nous offrons des solutions et de l'harmonie.

Scilm est présent depuis plus de 40 ans dans le marché des composantes de cuisine et fournis les plus grandes marques italiennes et européennes. Ce succès a été obtenu grâce à la technologie, le goût et le style fabriqué en Italy qui nous distingue. Nous ne fournissont pas seulement des composantes, mais de véritables systèmes et accessoires pour construire une cuisine moderne, pratique et robuste. Nous offrons des produits de qualité pour les foyers américains qui sont rapidement assemblés, modulaire et rendent les cuisines pratiquement éternel.

Les compétences de Scilm sont axées sur le moulage, l'extrusion de plastique et le revêtement. Scilm est également équipé d'équipement CNC de point pour la transformation d'aluminium et d'une usine moderne d'anodisation.

Les produits présentés dans ce catalogue sont entièrement fabriqués en Italie.

Scilm répond aux normes environnementales les plus sévères et dispose de la certification ISO pour la qualité et l'environnement.

Ofrecemos soluciones y la armonía.

Scilm ha operado por más de 40 años en el mercado de componentes de cocina y suministros de las grandes marcas italianas y europeas. Este éxito se ha logrado gracias a la tecnología, el gusto y la hizo en Italia el estilo que nos distingue. No sólo la oferta de artículos, sino verdaderos sistemas y accesorios para construir una cocina moderna, práctica y robusta. Queremos ofrecer productos de calidad para los hogares estadounidenses que son de montaje rápido, modular y hacer cocinas prácticamente eterna.

Las habilidades Scilm se centran en moldeo, extrusión de plásticos y recubrimientos. Scilm también está equipado con avanzados equipos de CNC para el procesamiento de aluminio anodizado y una planta moderna.

Los productos presentados en este catálogo son totalmente fabricados en Italia.

Scilm cumple con las regulaciones ambientales más graves y tiene la certificación ISO de calidad y sistema ambiental.

scilm®
AMERICA

Italian style for cabinets, available in America

Style italien pour les armoires, disponible en Amérique

Estilo italiano para los gabinetes, disponible en América

INNOVATION STARTS WITH SUSTAINABILITY

Innovation starts with sustainability.
Committed to sustainability, Scilm is aware of environmental protection policies and the health of its employees.
The company implements production processes to minimise all environmental impact while respecting the eco-system.
SCILM has redefined its products by introducing, twenty years ago, the use of lead-free PVC and completely recyclable aluminium, in line with the standards of modern modular kitchens.
The company focuses on alternative renewable sources and the production of clean energy while respecting the professional ethics that have always set it apart.

L'innovation a comme point de départ la durabilité.
Engagée dans le développement durable, Scilm a conscience des politiques de protection environnementale et de la santé de ses employés. La société met en place des procédés de fabrication en vue de minimiser toutes les répercussions environnementales tout en respectant l'écosystème.
SCILM a redéfini ses produits en introduisant, il y a vingt ans, l'utilisation du PVC sans plomb et l'aluminium complètement recyclable, conformément aux normes des cuisines modulaires modernes. La société se concentre sur les sources renouvelables alternatives et la production d'énergie propre tout en respectant l'éthique professionnelle qui l'a toujours distinguée.

La innovación comienza por la sostenibilidad.
Comprometida con la sostenibilidad, Scilm es consciente de las políticas de protección del medio ambiente y la salud de sus empleados. La empresa implementa procesos de producción para minimizar el impacto medioambiental al tiempo que se respeta el ecosistema.
Hace veinte años, SCILM ha redefinido sus productos introduciendo el uso de PVC sin plomo y aluminio completamente reciclable, en línea con las normas de las modernas cocinas modulares. La empresa se centra en fuentes renovables alternativas y en la producción de energías limpias al tiempo que respeta la ética profesional que desde siempre la ha diferenciado.

40 YEARS OF QUALITY

Our forty years of highly specialied experience
in the modular kitchen sector have lead to attention to details,
precision, sophisticated technology, ethics and aesthetics.

In a word: quality.

Scilm was the sixth company in Italy to obtain ICILA certification
in compliance with the standard UNI EN ISO 9001: 1994,
the specific certification for the furniture sectors and woodworking
production chain.

It assesses the conformity of the entire production line
with criteria of efficiency, effectiveness and sustainability.

Scilm currently has UNI ISO 9001, UNI EN ISO 14001,
Code of Ethics Legislative Decree no. 231/01
and UNI-INAIL Safe Work certification,
thus confirming that its operational processes are implemented
in compliance with the parameters of quality,
correct environmental management and safety at work.

These certifications are important achievements but,
above all, they are the right credentials and worthy testimony
to our ongoing commitment.

We are acknowledged worldwide for this value-added feature.

scilm®
[FURNITURE TECHNOLOGY]

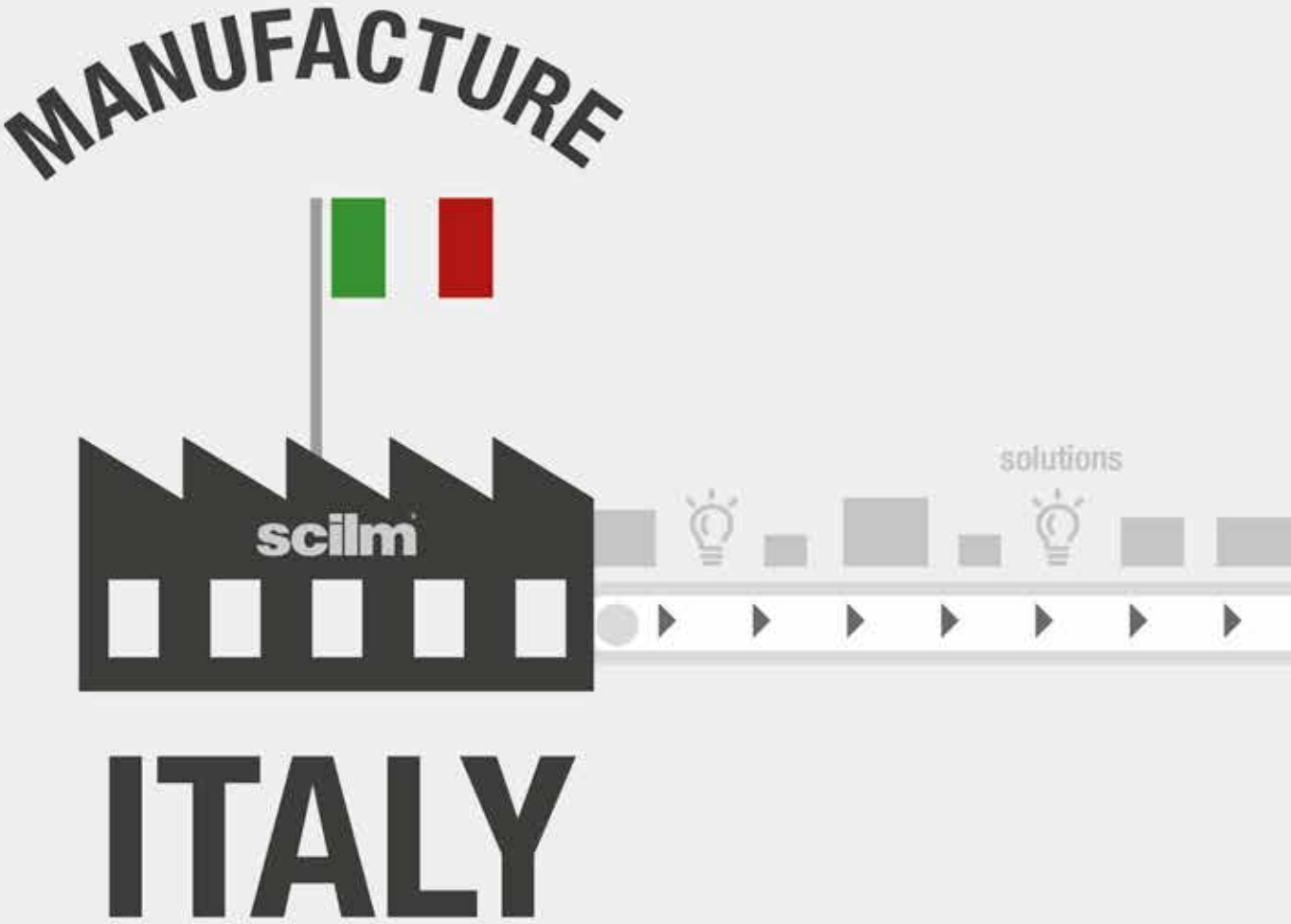
MANUFACTURE
scilm
solutions
ITALY

WAREHOUSE

USA

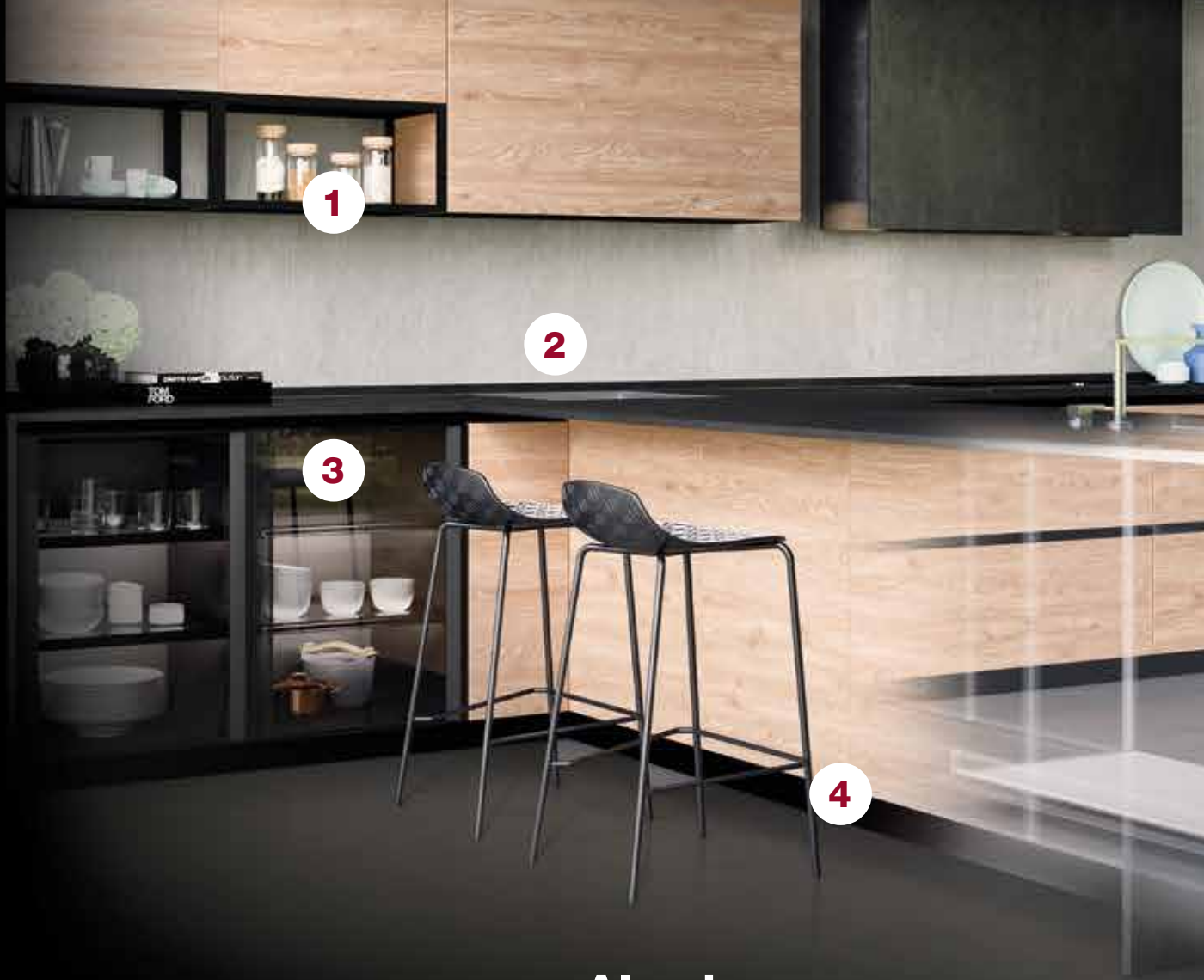

Exelent scilm

Aluminum structures 1

› WIDE CHOICE OF ALUMINIUM PROFILES
› AVAILABLE IN VARIOUS DIMENSIONS AND SECTIONS
› THEY CAN BE COMBINED WITH WOOD AND GLASS PANELS

Toe kick and accessories 4

› THEY ALLOW THE PLINTH TO BE EASILY RELEASED
› SPEED UP CLEANING OPERATIONS IMPROVING HYGIENE
› SUITABLE FOR ALL TYPES OF LEGS AND TOE KICK

Gola Profiles 7

› NO NEED TO DRILL HOLES IN CABINETS
› WIDE RANGE OF CUSTOMISATIONS AND FINISHES
› IDEAL FOR ALL AESTHETIC AND STRUCTURAL REQUIREMENTS

Backsplash moldings 2

› THEY MAKE A KITCHEN ELEGANT AND HYGIENIC
› THEY HAVE HAD BIOSHIELD ANTIBACTERIAL TREATMENT
› AVAILABLE IN VARIOUS MODELS AND FINISHES

Strike shelves 3

› MADE OF ALUMINIUM OR GLASS
› GREATER LOAD CAPACITY THAN STANDARD SHELVES
› AVAILABLE WITH BUILT-IN LEDS

Drip pans 5

› AVAILABLE IN ALUMINIUM AND THERMOFORMED PLASTIC
› GASKETS WITH TO ANTIBACTERIAL TREATMENT
› IT CAN FIT ANY PIECE OF FURNITURE

Plan.a door 6

› STREAMLINED ALUMINIUM STRUCTURE
› SHOCKPROOF JUNCTIONS THAT ELIMINATE SHARP EDGES
› DOES NOT ALTER HINGE ADJUSTMENTS AND ALIGNMENTS

Catenaria profiles 8

› THEY CAN BE FITTED TO THE FRONT AND TO THE REAR
› EASY TO MOUNT ON ALL CABINETS
› PROFILES CAN BE CUSTOMISED

Legs 9

› HIGH PERFORMANCE COMBINED WITH HIGH RESISTANCE
› QUICK TO ASSEMBLE AND EASY TO ADJUST
› MADE OF HIGH-QUALITY PLASTIC

COMPONENTS AND FITTINGS FOR BUILDING CABINETRY IN AMERICA

scilm®
AMERICA

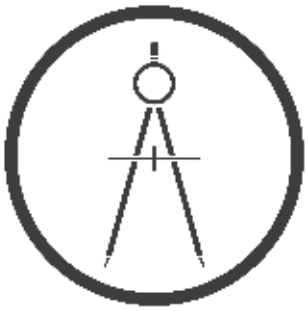

FOR DESIGNERS

FOR CABINET MAKERS

LEG LEVELERS, SOCKETS AND CLIPS	*PIEDS NIVELEURS, BASES ET ATTACHES*	PATAS DE NIVELACION, BASES Y PINZAS DE ZOCALO	15
TOE KICK AND ACCESSORIES	*COUP DE PIED ET ACCESSOIRES*	ZOCALO Y ACCESORIOS	25
"GOLA" PROFILE	*PROFILÉ "GOLA"*	PERFIL "GOLA"	35
BACKSPLASH MOLDINGS	*PROFILÉS D'ÉTANCHÉITÉ*	COPETES	67
DRIP PANS	*PROTECTION POUR LE MEUBLE SOUS ÉVIER*	PROTECCIÓN PARA EL MUEBLE DE FREGADERO	77
CATENARIA PROFILES	*PROFILS CATENARIA*	CATENARIA PERFILES	83
DRAWER ACCESSORIES	*ACCESSOIRES DE TIROIRS*	ACCESSORIOS PARA CAJONES	89
BRACKETS AND SUPPORTS	*CROCHETS ET SUPPORTS*	SOPORTES Y APOYOS	97
ALUMINUM STRUCTURES	*STRUCTURES EN ALUMINIUM*	ESTRUCTURAS DE ALUMINIO	105
ALUMINUM STRUCTURES FOR CABINETS	*STRUCTURES EN ALUMINIUM POUR ARMOIRES*	ESTRUCTURAS DE ALUMINIO PARA ARMARIOS	123
STRIKE ALUMINUM SHELVING SYSTEM	*STRIKE SYSTÈME D'ÉTAGÈRES EN ALUMINIUM*	STRIKE DE ALUMINIO SISTEMA DE ESTANTERÍA	129
DOOR FRAMES	*CADRES DE PORTES*	MARCOS DE PUERTAS	143
CURVED "VELA" DOORS	*PORTE "VELA" COURBÉE*	PUERTA "VELA" CURVA	153
BUMPERS, PLATES AND SCREWS	*PARE-CHOCS, PLAQUES ET VIS*	PARACHOQUES, PLACAS Y TORNILLOS	155
ALUMINUM TABLE FRAMES	*STRUCTURE DE LA TABLE EN ALUMINIUM*	TABLA ESTRUCTURA DE ALUMINIO	157

WE MAKE THE DIFFERENCE IN THE KITCHEN

LEG LEVELERS, SOCKETS AND CLIPS

LEG LEVELERS, SOCKETS AND CLIPS

Why...
It's the best way to install your cabinets.

- Quick to install, no tools required
- Cabinets built on Legs are easier to handle and have less chances of being damaged
- Cabinets on legs are easier to pack, stack and ship
- Cabinet protection against water and dirt
- Legs provide easy access for electrical, plumbing and cleaning
- Water resistant
- Lower cost than toe kick notched gables

PIEDS NIVELEURS, BASES ET ATTACHES

Pourquoi...
C'est la meilleure façon d'installer vos armoires.

- *Rapide à installer, aucun outils nécessaire*
- *Les armoires construits sur pied niveleur sont plus faciles à manipuler et ont moins de chances d'être endommagé*
- *Les armoires construits sur pied niveleur sont plus faciles à emballer, empiler et expédier*
- *Le pied niveleur permet un accès facile pour l'électricité, la plomberie et le nettoyage*
- *Protection d'armoires contre l'eau et la saleté*
- *Résistant à l'eau*
- *Coûts inférieur qu'armoire aux côtés encoché pour coup de pied*

PATAS DE NIVELACION, BASES Y PINZAS DE ZOCALO

Por qué...
Esta es la major forma de instalar sus muebles

- Rápido de instalar, no requiere herramientas
- Los muebles construidos sobre patas son más fáciles de manejar y tienen menos probabilidades de sufrir daños
- Los muebles con las patas son más fáciles de empaquetar, apilar y transportar
- Protección de los muebles contra el agua y la suciedad
- Las patas facilitan el acceso a la electricidad, fontaneria y facilitan la limpieza
- Resistente al agua
- Cuesta menos que la fabricación de paneles laterales con muescas para socalos de madera

LEG LEVELERS, SOCKETS AND CLIPS

Technical Specifications...

- Material: High quality PVC composition
- Performance: 882 lbs (400 kgs) weight resistance per leg
- Environment: 100% recyclable materials, Lead Free PVC

PIEDS NIVELEURS, BASES ET ATTACHES

Spécifications Techniques...

- *Matériel: Composition de PVC de haute qualité*
- *Performance: 882 lbs (400 kgs) résistance au poids par pied*
- *Environnement: Matériaux 100% recyclables, PVC Sans Plomb*

PATAS DE NIVELACION, BASES Y PINZAS DE ZOCALO

Especificaciones Técnicas...

- Material: Composición de PVC de alta calidad
- Rendimiento: 882 libras (400 kg) resistencia el peso por pata
- Medio Ambiente: Materiales 100% reciclables, PVC sin plomo

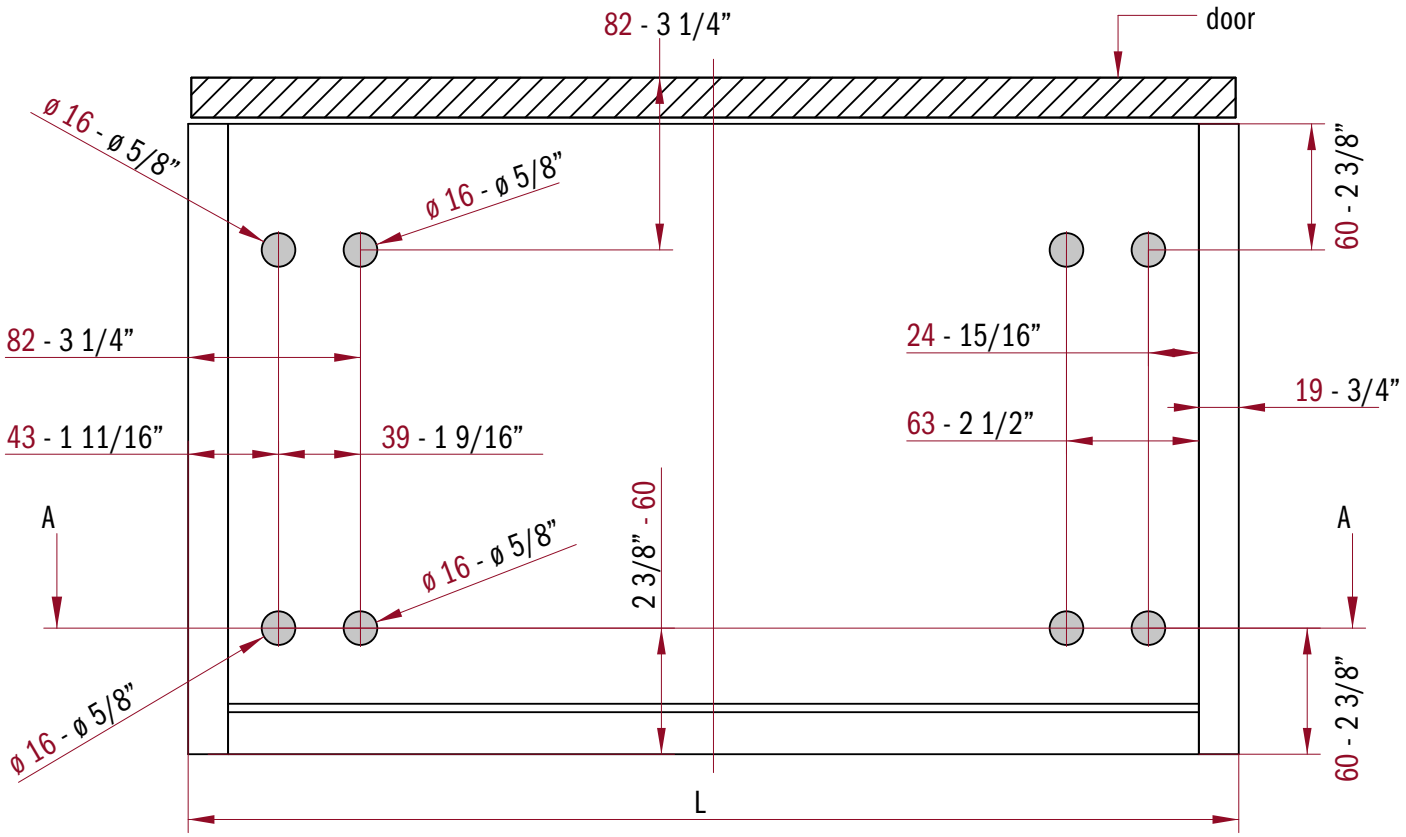

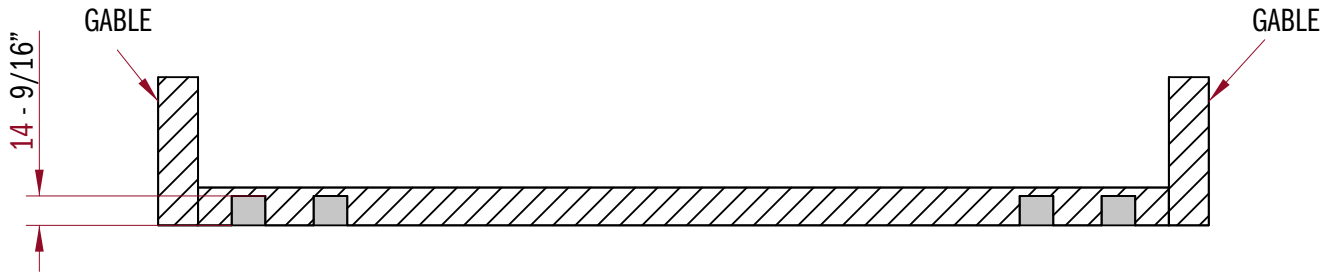

LEG LEVELERS, SOCKETS AND CLIPS

PIEDS NIVELEURS, BASES ET ATTACHES

PATAS DE NIVELACION, BASES Y PINZAS DE ZOCALO

250FR28C

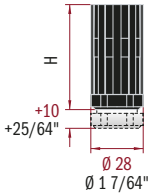

PVC LEG LEVELER
Adjustment 10mm - 3/8"
Other Sizes Available FROM ITALY

To be used with socket
RBA74S
RBA76S
RBA85

PIED NIVELEUR EN PVC
Réglage 10mm - 3/8"
Autres Dimensions Disponibles DE L'ITALIE

Pour être utilisé avec la base
RBA74S
RBA76S
RBA85

PATA DE REGULACION DE PVC
Regulacion de 10mm - 3/8"
Otras Dimensiones Posibles FROM ITALY

Para ser utilizado con la base
RBA74S
RBA76S
RBA85

ITEM NUMBER	HEIGHT mm	HEIGHT inch	PCS PER BOX	BOX DIMENSION mm W x D x H	BOX DIMENSION inch W x D x H	BOX WEIGHT KG	BOX WEIGHT LB	STOCK IN AMERICA MSRP PRICING USD EACH	STOCK IN AMERICA MSRP PRICING USD BOX
U250FR28C06SF	60 - 70	2 3/8" - 2 3/4"	150	400 x 300 x 200	15 3/4" x 11 3/4" x 7 7/8"	5.00	11.02	1.483	222.450

250FR52SF

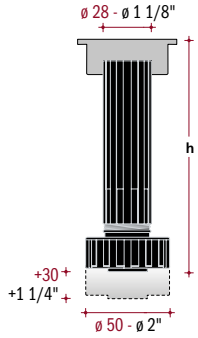

PVC LEG LEVELER
Adjustment, 30mm - 1 1/4"
Other Sizes Available FROM ITALY

To be used with socket
RBA74S
RBA76S
RBA85

PIED NIVELEUR EN PVC
Réglage, 30mm - 1 1/4"
Autres Dimensions Disponibles DE L'ITALIE

Pour être utilisé avec la base
RBA74S
RBA76S
RBA85

PATA DE REGULACION DE PVC
Regulacion de 30.mm - 1 1/4"
Otras Dimensiones Posibles FROM ITALY

Para ser utilizado con la base
RBA74S
RBA76S
RBA85

ITEM NUMBER	HEIGHT mm	HEIGHT inch	PCS PER BOX	BOX DIMENSION mm W x D x H	BOX DIMENSION inch W x D x H	BOX WEIGHT KG	BOX WEIGHT LB	STOCK IN AMERICA MSRP PRICING USD EACH	STOCK IN AMERICA MSRP PRICING USD BOX
U250FR5210SF	100 - 130	3 15/16" - 5 1/8"	100	400 x 300 x 200	15 3/4" x 11 3/4" x 7 7/8"	4.50	9.92	1.040	104.000
U250FR5211SF	110 - 140	4 5/16" - 5 1/2"	100	400 x 300 x 200	15 3/4" x 11 3/4" x 7 7/8"	5.00	11.02	1.051	105.100
U250FR5212SF	120 - 150	4 3/4" - 5 7/8"	100	400 x 300 x 200	15 3/4" x 11 3/4" x 7 7/8"	5.00	11.02	1.056	105.600
U250FR5214SF	140 - 170	5 1/2" - 6 11/16"	100	400 x 300 x 300	15 3/4" x 11 3/4" x 11 3/4"	5.50	12.13	1.078	107.800
								AVAILABLE FROM ITALY MSRP PRICING USD	
250FR5217SF	170-200	6 11/16" - 7 7/8"	<<<<< MINIMUM ORDER AND PACKAGING TO BE CONFIRMED >>>>>					1.007	

270FR270SF

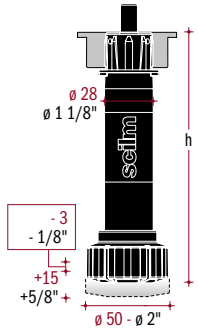

PVC LEG LEVELER
Adjustment, 15mm - 5/8"
Other Sizes Available FROM ITALY

To be used with socket
RBA74S
RBA85

PIED NIVELEUR EN PVC
Réglage, 15mm - 5/8"
Autres Dimensions Disponibles DE L'ITALIE

Pour être utilisé avec la base
RBA74S
RBA85

PATA DE REGULACION DE PVC
Regulacion de 15 mm - 5/8"
Otras Dimensiones Disponibles DE ITALIA

Para ser utilizado con la base
RBA74S
RBA85

ITEM NUMBER	HEIGHT mm	HEIGHT inch	PCS PER BOX	BOX DIMENSION mm W x D x H	BOX DIMENSION inch W x D x H	BOX WEIGHT KG	BOX WEIGHT LB	STOCK IN AMERICA MSRP PRICING USD EACH	STOCK IN AMERICA MSRP PRICING USD BOX
U270FR27010SF	097 - 115	3 13/16" - 4 1/2"	100	400 x 300 x 200	15 3/4" x 11 3/4" x 7 7/8"	4.00	8.82	0.874	87.400
U270FR27011SF	107 - 125	4 3/16" - 4 15/16"	100	400 x 300 x 200	15 3/4" x 11 3/4" x 7 7/8"	4.20	9.26	0.885	88.500
U270FR27012SF	117 - 135	4 5/8" - 5 5/16"	100	400 x 300 x 200	15 3/4" x 11 3/4" x 7 7/8"	4.30	9.48	0.907	90.700
U270FR27015SF	147 - 165	5 3/4" - 6 1/2"	100	400 x 300 x 300	15 3/4" x 11 3/4" x 11 3/4"	4.50	9.92	0.940	94.000

LEG LEVELERS, SOCKETS AND CLIPS

PIEDS NIVELEURS, BASES ET ATTACHES

PATAS DE NIVELACION, BASES Y PINZAS DE ZOCALO

280R270SF

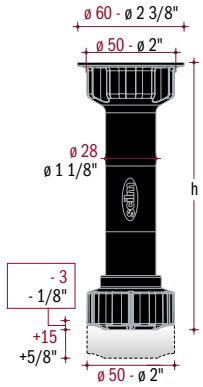

PVC LEG LEVELER
Adjustment, 15mm - 5/8"
Other Sizes Available FROM ITALY

Does not require the use of the socket

PIED NIVELEUR EN PVC
Réglage, 15mm - 5/8"
Autres Dimensions Disponibles DE L'ITALIE

Ne nécessite pas l'utilisation de la base

PATA DE REGULACION DE PVC
Reglacion 15mm - 5/8"
Otras Dimensiones Disponibles DE ITALIA

No requiere el uso de la base

ITEM NUMBER	HEIGHT mm	HEIGHT inch	PCS PER BOX	BOX DIMENSION mm W x D x H	BOX DIMENSION inch W x D x H	BOX WEIGHT KG	BOX WEIGHT LB	STOCK IN AMERICA MSRP PRICING USD EACH	STOCK IN AMERICA MSRP PRICING USD BOX
U280R27010SF	097 - 115	3 13/16" - 4 1/2"	100	400 x 300 x 300	15 3/4" x 11 3/4" x 11 3/4"	4.50	9.92	0.746	74.600
U280R27012SF	117 - 135	4 5/8" - 5 5/16"	100	400 x 300 x 300	15 3/4" x 11 3/4" x 11 3/4"	5.00	11.02	0.769	76.900
U280R27015SF	147 - 165	5 3/4" - 6 1/2"	150	500 x 400 x 300	19 5/8" x 15 3/4" x 11 3/4"	8.25	18.19	0.770	115.500

RBA74S

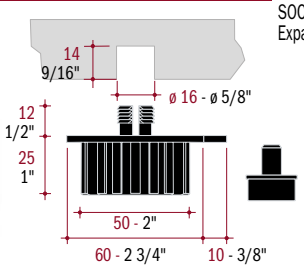

SOCKET FOR LEG LEVELER
Expansion Type with Peg

BASE POUR PIED NIVELEUR
Type à Expansion avec Cheville

BASE PARA PATA DE REGULACION
Tipo de Expansion con Clavija

ITEM NUMBER	PCS PER BOX	BOX DIMENSION mm W x D x H	BOX DIMENSION inch W x D x H	BOX WEIGHT KG	BOX WEIGHT LB	STOCK IN AMERICA MSRP PRICING USD EACH	STOCK IN AMERICA MSRP PRICING USD BOX
URBA74S	200	400 x 300 x 300	15 3/4" x 11 3/4" x 11 3/4"	6.50	14.33	0.597	119.400

RBA81

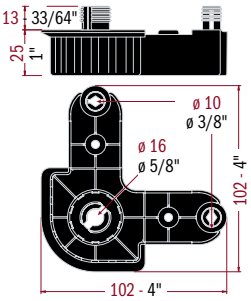

TRIANGULAR EXPANSION SOCKET FOR LEG LEVELER

BASE TRIANGULAIRE POUR PIED NIVELEUR

BASE TRIAGULAR DE REGULACION

ITEM NUMBER	PCS PER BOX	BOX DIMENSION mm W x D x H	BOX DIMENSION inch W x D x H	BOX WEIGHT KG	BOX WEIGHT LB	STOCK IN AMERICA MSRP PRICING USD EACH	STOCK IN AMERICA MSRP PRICING USD BOX
URBA81	100	400 x 300 x 300	15 3/4" x 11 3/4" x 11 3/4"	4.50	9.92	0.697	69.700

RBA85

NEW!

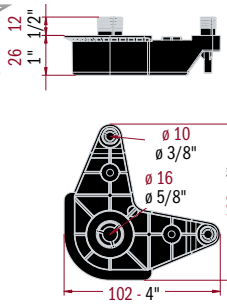

TRIANGULAR EXPANSION SOCKET FOR LEG LEVELER

BASE TRIANGULAIRE POUR PIED NIVELEUR

BASE TRIAGULAR DE REGULACION

ITEM NUMBER	PCS PER BOX	BOX DIMENSION mm W x D x H	BOX DIMENSION inch W x D x H	BOX WEIGHT KG	BOX WEIGHT LB	STOCK IN AMERICA MSRP PRICING USD EACH	STOCK IN AMERICA MSRP PRICING USD BOX
URBA85-02	100	400 x 300 x 300	15 3/4" x 11 3/4" x 11 3/4"	4.50	9.92	0.635	63.500

NEW! NEW DESIGN WILL REPLACE CURRENT DESIGN WHEN CURRENT DESIGN INVENTORY IS OVER

LEG LEVELERS, SOCKETS AND CLIPS

PIEDS NIVELEURS, BASES ET ATTACHES

PATAS DE NIVELACION, BASES Y PINZAS DE ZOCALO

RBA76S

SOCKET FOR LEG LEVELER
Screwed Type with Peg

BASE POUR PIED NIVELEUR
Type à Visser avec Cheville

BASE PARA PATA DE REGULACION
Tipo de Expansion con Clavija

ITEM NUMBER	PCS PER BOX	BOX DIMENSION mm W x D x H	BOX DIMENSION inch W x D x H	BOX WEIGHT KG	BOX WEIGHT LB	STOCK IN AMERICA MSRP PRICING USD EACH	STOCK IN AMERICA MSRP PRICING USD BOX
URBA76S	200	400 x 300 x 200	15 3/4" x 11 3/4" x 7 7/8"	6.00	13.23	0.597	119.400

VPF

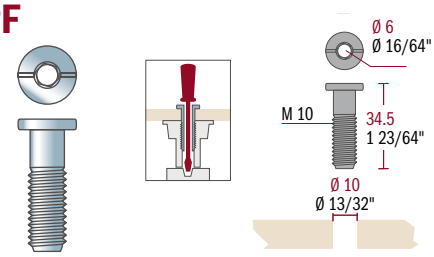

DRILLED SCREW M10 FOR SOCKET

VIS PERCÉ M10 POUR BASE

TORNILLOS M10 PARA BASE

ITEM NUMBER	PCS PER BOX	BOX DIMENSION mm W x D x H	BOX DIMENSION inch W x D x H	BOX WEIGHT KG	BOX WEIGHT LB	STOCK IN AMERICA MSRP PRICING USD EACH	STOCK IN AMERICA MSRP PRICING USD BOX
UVPF00000000	100	150 x 100 x 90	5 7/8" x 3 7/8" x 3 1/2"	2.50	5.51	0.564	56.400

PRAF

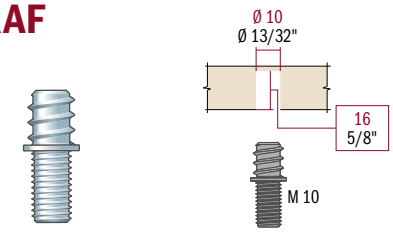

BOLT M10/D12.5 FOR SOCKETS
for Wood

BOULON M10/D12.5 POUR BASE
pour Bois

PERNO M10/D12,5 PARA BASE
para Madera

ITEM NUMBER	PCS PER BOX	BOX DIMENSION mm W x D x H	BOX DIMENSION inch W x D x H	BOX WEIGHT KG	BOX WEIGHT LB	STOCK IN AMERICA MSRP PRICING USD EACH	STOCK IN AMERICA MSRP PRICING USD BOX
UPRAF10/10MA	100	150 x 100 x 90	5 7/8" x 3 7/8" x 3 1/2"	2.00	4.41	0.536	53.600

KIT PIED

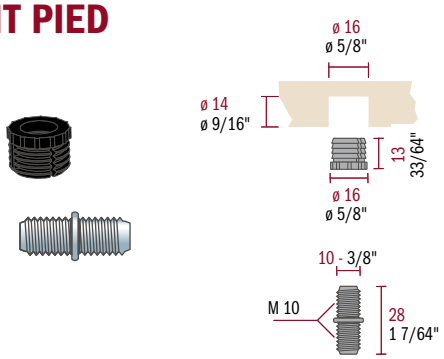

BUSHING AND BOLT FOR SOCKETS
Bushing BI6046SF (100pcs)
+ Bolt PR10MA-C28 (100pcs)

DOUILLE ET BOULON POUR BASE
Douille BI6046SF (100pcs)
+ Boulon PR10MA-C28 (100pcs)

BOTELLA Y TORNILLO ROSCADO PARA FIJACIÓN BASE
Botella BI6046SF (100pcs)
+ Tornillo Roscado PR10MA-C28 (100pcs)

ITEM NUMBER	KIT PER BOX	BOX DIMENSION mm W x D x H	BOX DIMENSION inch W x D x H	BOX WEIGHT KG	BOX WEIGHT LB	STOCK IN AMERICA MSRP PRICING USD KIT	STOCK IN AMERICA MSRP PRICING USD BOX
UKIT.PIED.001	1	150 x 100 x 90	5 7/8" x 3 7/8" x 3 1/2"	2.00	4.41	61.399	61.399

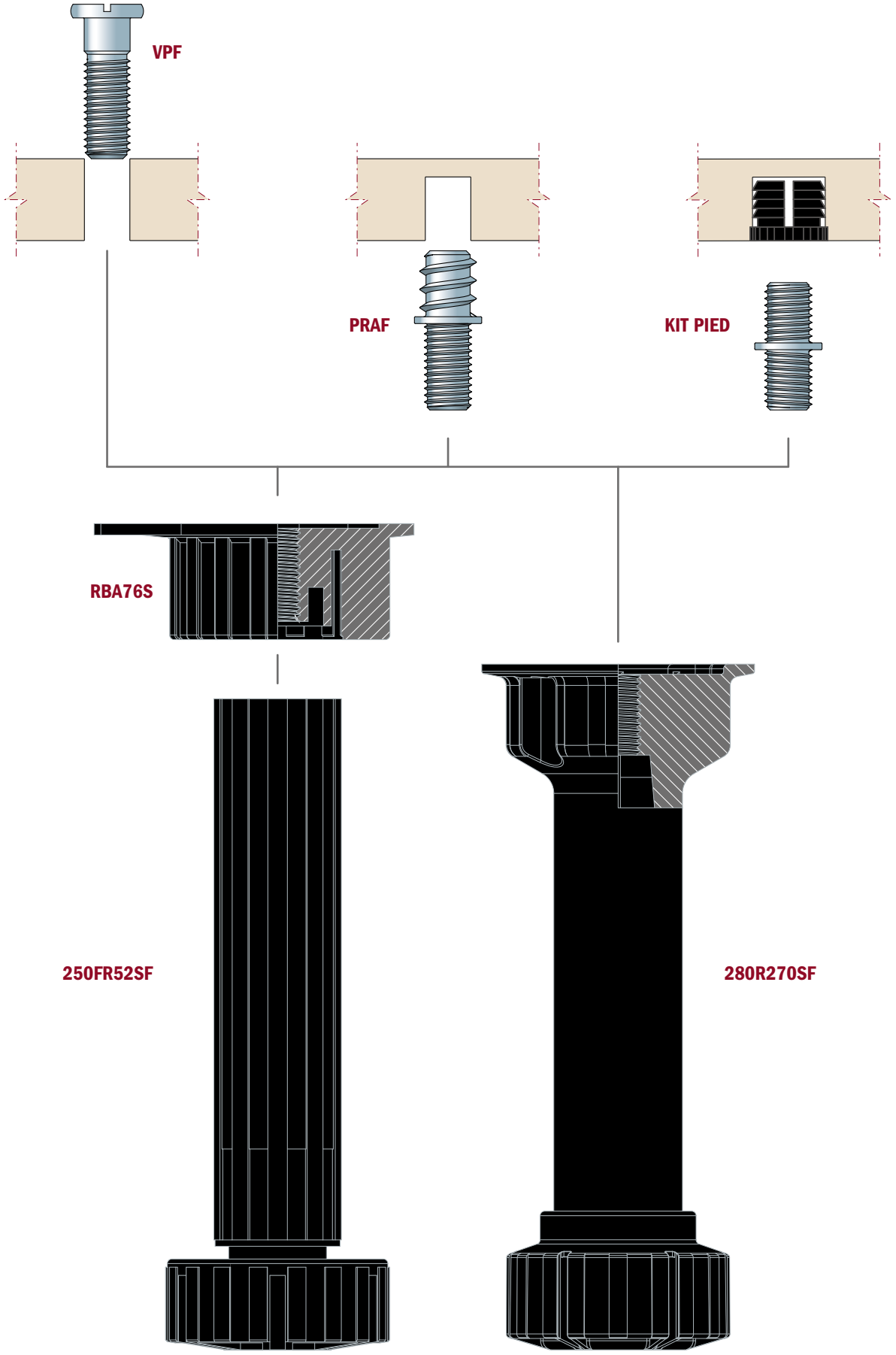
VPF
PRAF
KIT PIED
RBA76S
250FR52SF
280R270SF

LEG LEVELERS, SOCKETS AND CLIPS

PIEDS NIVELEURS, BASES ET ATTACHES

PATAS DE NIVELACION, BASES Y PINZAS DE ZOCALO

GZR58

CLIP WITH PLATE FOR LEG LEVELER AND TOE KICK
01 for Grooved Wood
02 Twist-on, Locks into PVC or Aluminum
03 with Holes, to be Screwed

ATTACHE AVEC PLAQUE POUR PIED NIVELEUR ET COUP DE PIED
01 pour Bois Rainuré
02 Twist-On, se verrouille sur le PVC ou l'Aluminium
03 avec Trous, à Visser

GANCHO ZOCALO CON BASE PARA ZOCALO
01 para madera ranurada
02 con Sistema de Giro dentro de la ranura de PVC or Aluminio
03 para Atornillara

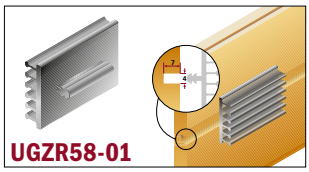

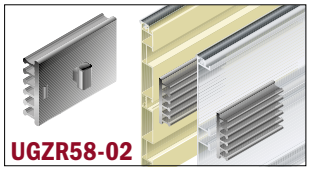

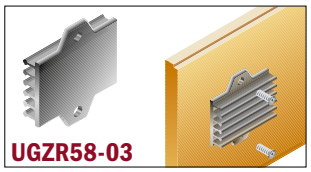

ITEM NUMBER	PCS PER BOX	BOX DIMENSION mm W x D x H	BOX DIMENSION inch W x D x H	BOX WEIGHT KG	BOX WEIGHT LB	STOCK IN AMERICA MSRP PRICING USD EACH	STOCK IN AMERICA MSRP PRICING USD BOX
UGZR58-01	100	460 x 170 x 120	18 1/8" x 6 3/4" x 4 3/4"	1.50	3.31	0.422	42.200
UGZR58-01/C	700	500 x 400 x 300	19 5/8" x 15 3/4" x 11 3/4"	10.00	22.05	0.259	181.300
UGZR58-02	100	460 x 170 x 120	18 1/8" x 6 3/4" x 4 3/4"	1.50	3.31	0.422	42.200
UGZR58-02/C	700	500 x 400 x 300	19 5/8" x 15 3/4" x 11 3/4"	10.00	22.05	0.259	181.300
UGZR58-03	100	460 x 170 x 120	18 1/8" x 6 3/4" x 4 3/4"	1.50	3.31	0.422	42.200
UGZR58-03/C	700	500 x 400 x 300	19 5/8" x 15 3/4" x 11 3/4"	10.00	22.05	0.259	181.300

GZR54

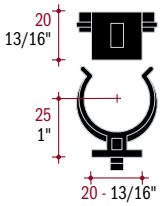

CLIP WITHOUT PLATE FOR LEG LEVELER AND TOE KICK

ATTACHE SANS PLAQUE POUR PIED NIVELEUR ET COUP DE PIED

GANCHO ZOCALO SIN BASE PARA PATA Y ZOCALO

ITEM NUMBER	PCS PER BOX	BOX DIMENSION mm W x D x H	BOX DIMENSION inch W x D x H	BOX WEIGHT KG	BOX WEIGHT LB	STOCK IN AMERICA MSRP PRICING USD EACH	STOCK IN AMERICA MSRP PRICING USD BOX
UGZR54	100	220 x 165 x 140	8 5/8" x 6 1/2" x 5 1/2"	0.50	1.10	0.440	44.000
UGZR54/C	1500	400 x 300 x 200	15 3/4" x 11 3/4" x 7 7/8"	5.00	11.02	0.164	246.000

WE MAKE THE
DIFFERENCE
IN THE KITCHEN

TOE KICK AND ACCESSORIES

TOE KICK AND ACCESSORIES

Why...
If the Leg Leveler offers cabinet protection then the Toe Kick will provide an esthetical result.

- Quick to install, no tools required
- Easily removable for cleaning
- Water resistant
- Lower cost than traditional toe kick

COUP DE PIED ET ACCESSOIRES

Pourquoi...
Si le Pied Nivelleur offre une protection a l'armoire donc le coup de pied fournira un résultat esthétique.

- *Rapide à installer, aucun outils nécessaire*
- *Facilement amovibles pour le nettoyage*
- *Résistant à l'eau*
- *Coûts inférieur au coup de pied traditionnel*

ZOCALO Y ACCESORIOS

Por qué...
Si la pata niveladora ofrece una proteccion al mueble, el zocalo proporciona un resultado estetico.

- Rápido de instalar, sin necesidad de herramientas
- Fácilmente extraíble para su limpieza
- Resistente al agua
- Cuesta menos que lo zocalo tradicionales

Technical Specifications...
- Material: Aluminum and PVC
- Performance: Aluminum extrusion with high quality anodized finishes and calibrated PVC extrusion with durable foiled coatings
- Environment: 100% recyclable aluminium, Lead Free PVC

Spécifications Techniques...
- *Matériel: Aluminium et PVC*
- *Performance: Extrusion d'aluminium avec finitions anodisées de haute qualité et PVC calibré recouvert de feuille d'aluminium*
- *Environnement: Aluminium 100% recyclable, PVC Sans Plomb*

Especificaciones Técnicas...
- Material: Aluminio y PVC
- Rendimiento: extrusión de aluminio con acabados anodizado de alta calidad y PVC calibrado revestido de lámina de aluminio
- Medio Ambiente: Aluminio 100% reciclable, PVC sin plomo

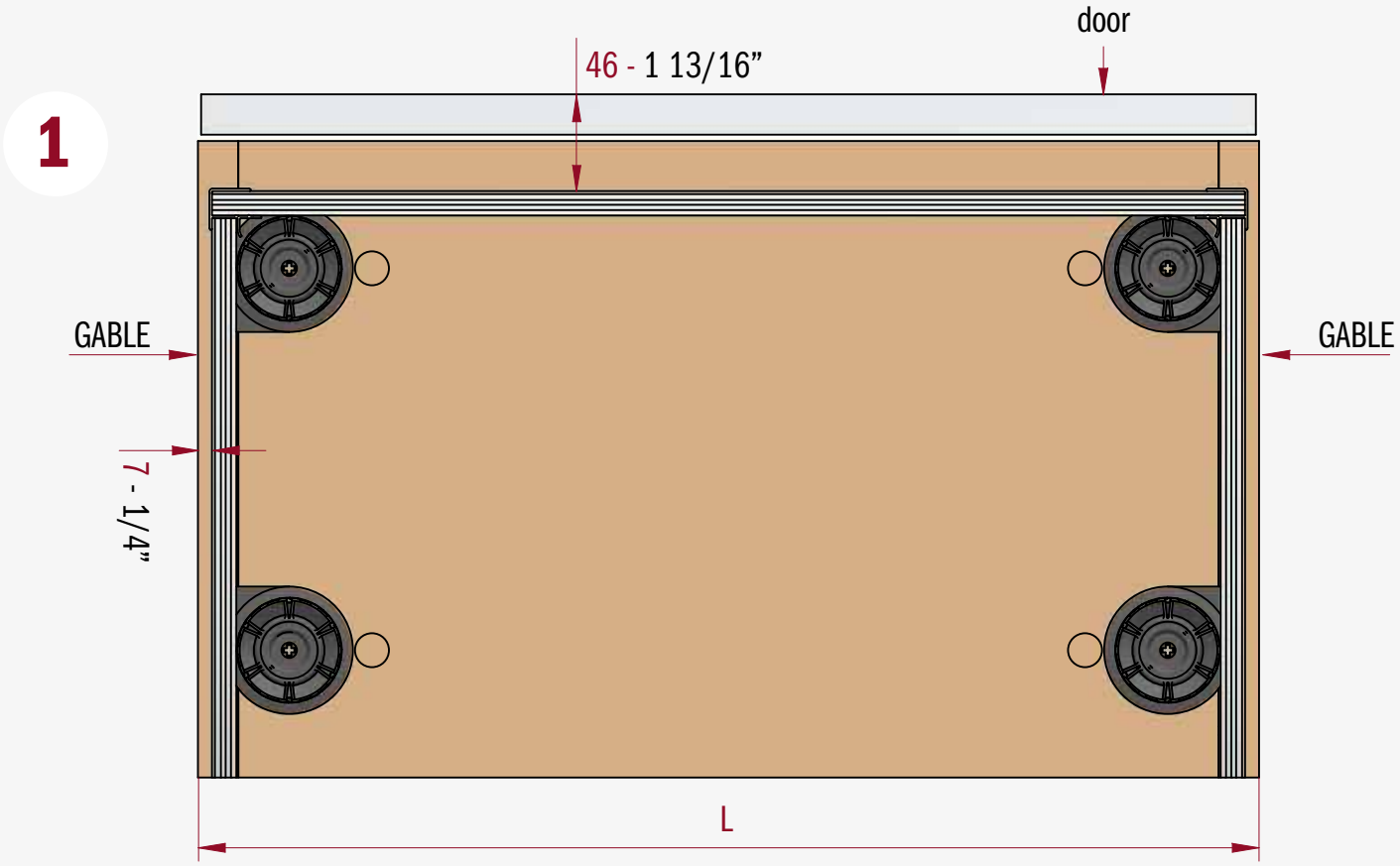

2

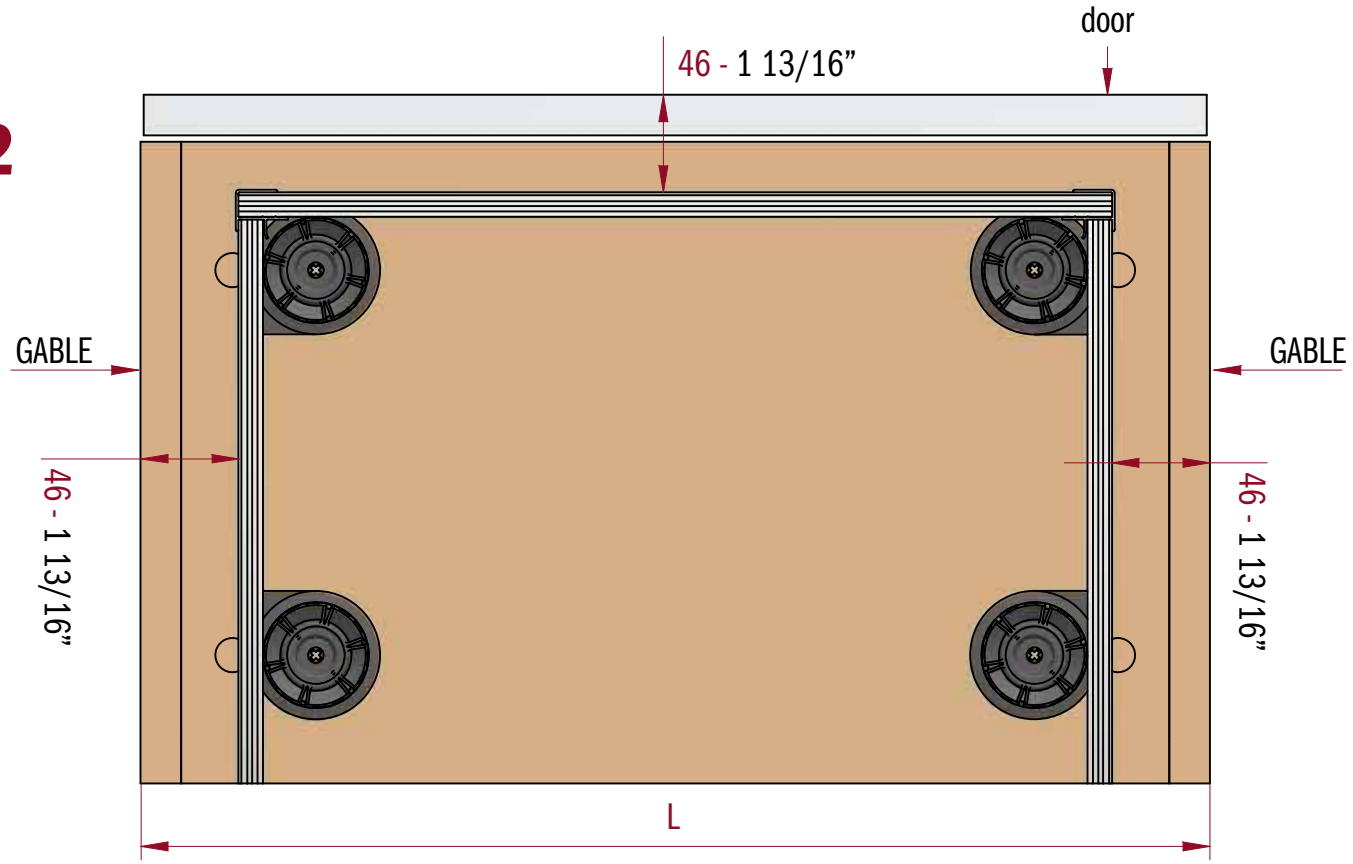
door
46 - 1 13/16”
GABLE
GABLE
46 - 1 13/16”
46 - 1 13/16”
L

3

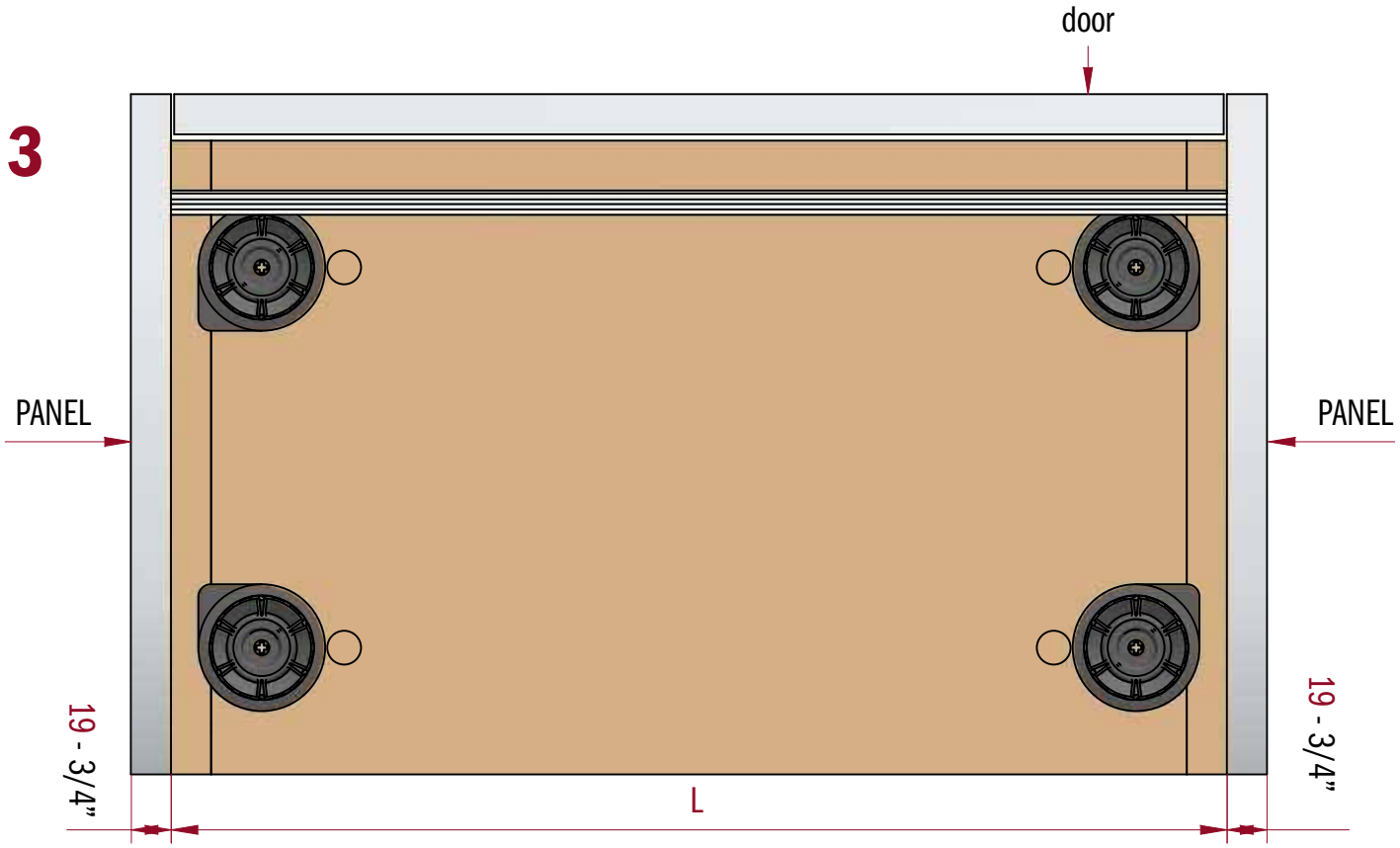
door
PANEL
PANEL
19 - 3/4”
19 - 3/4”
L

A11 Aluminum Foil Clear | *A11 Feuille Aluminium Clair* | A11 Aluminio Claro

A12 Aluminum Foil Stainless | *A12 Feuille Aluminium Inox* | A12 Folio de Aluminio Inox

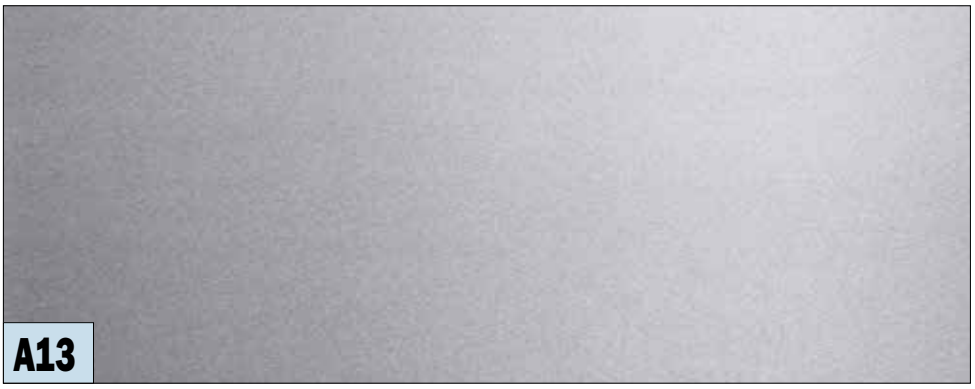

A13 Aluminum Foil Chrome | *A13 Feuille Aluminium Chrome* | A13 Folio de Aluminio Cromado

706 Melamine Foil Black | *706 Feuille de Mélamine Noire* | 706 Lámina de Melamina Negra

4600

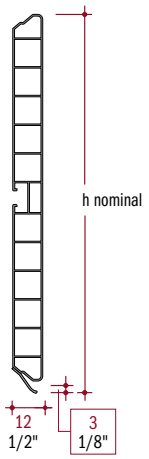

TOE KICK AND ACCESSORIES

FOILED PVC TOE KICK
A11 Aluminum Foil Clear
A12 Aluminum Foil Stainless
A13 Aluminum Foil Chrome
706 Black Matt (without Protective Film)
Other Colors and Sizes Available FROM ITALY

COUP DE PIED ET ACCESSOIRES

COUP DE PIED EN PVC RECOUVERT
A11 Feuille Aluminium Clair
A12 Feuille Aluminium Inox
A13 Feuille Aluminium Chrome
706 Noir Mat (sans Pellicule Protectrice)
Autres Couleurs et Dimensions Disponibles DE L'ITALIE

ZOCALO Y ACCESORIOS

ZOCALO DE PVC REVESTIDO
A11 Aluminio Claro
A12 Folio de Aluminio Inox
A13 Folio de Aluminio Cromado
706 Negro mate (sin Película Protectora)
Otros Colores y Dimensiones DE ITALIA

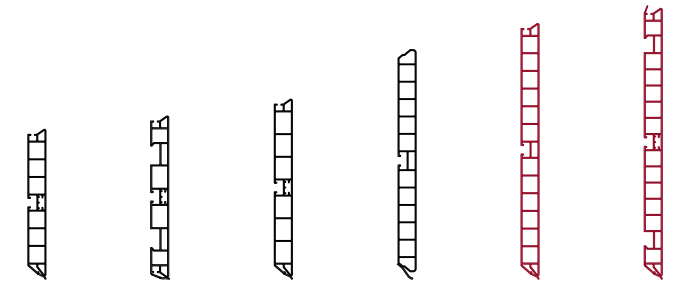

COLORS	ITEM NUMBER	HEIGHT		LENGTH		PCS PER BOX	BOX DIMENSION		BOX WEIGHT		STOCK IN AMERICA MSRP PRICING USD			
							mm	inch						
		mm	inch	mm	inch		W x D x H	W x D x H	KG	LB	METER	FOOT	EACH	BOX
A11	U460010A111RF	100	3 15/16"	2670	105 1/8"	10	2740 x 145 x 110	107 7/8" x 5 3/4" x 4 3/8"	11.50	25.35	7.943	2.421	21.208	212.078
A11	U460010A1101F	100	3 15/16"	4000	157 1/2"	10	4050 x 145 x 110	159 1/2" x 5 3/4" x 4 3/8"	18.00	39.68	7.759	2.365	31.036	310.360
A11	U460011A111RF	110	4 5/16"	2670	105 1/8"	11	2740 x 140 x 130	107 7/8" x 5 1/2" x 5 1/8"	14.00	30.86	9.344	2.848	24.948	274.433
A11	U460011A1101F	110	4 5/16"	4000	157 1/2"	10	4050 x 140 x 130	159 1/2" x 5 1/2" x 5 1/8"	19.00	41.89	9.185	2.800	36.740	367.400
A11	U460012A111RF	120	4 3/4"	2670	105 1/8"	10	2740 x 140 x 130	107 7/8" x 5 1/2" x 5 1/8"	14.00	30.86	9.127	2.782	24.369	243.691
A11	U460012A1101F	120	4 3/4"	4000	157 1/2"	10	4050 x 140 x 130	159 1/2" x 5 1/2" x 5 1/8"	20.50	45.19	8.726	2.660	34.904	349.040
A11	U460015A111RF	150	5 7/8"	2670	105 1/8"	9	2740 x 160 x 120	107 7/8" x 6 1/4" x 4 3/4"	15.00	33.07	10.588	3.227	28.270	254.430
A11	U460015A1101F	150	5 7/8"	4000	157 1/2"	9	4050 x 160 x 120	159 1/2" x 6 1/4" x 4 3/4"	22.50	49.60	10.526	3.208	42.104	378.936
											AVAILABLE FROM ITALY MSRP PRICING USD			
A11	R460017A1101F	170	6 11/16"	4000	157 1/2"		<<<<< MINIMUM ORDER AND PACKAGING TO BE CONFIRMED >>>>>				12.473	3.802	49.892	
A11	R460018A1101F	180	7 1/16"	4000	157 1/2"		<<<<< MINIMUM ORDER AND PACKAGING TO BE CONFIRMED >>>>>				13.649	4.160	54.596	
A12	U460010A121RF	100	3 15/16"	2670	105 1/8"	10	2740 x 145 x 110	107 7/8" x 5 3/4" x 4 3/8"	11.50	25.35	8.619	2.627	23.013	230.127
A12	U460010A1201F	100	3 15/16"	4000	157 1/2"	10	4050 x 145 x 110	159 1/2" x 5 3/4" x 4 3/8"	18.00	39.68	8.428	2.569	33.712	337.120
A12	U460011A121RF	110	4 5/16"	2670	105 1/8"	11	2740 x 140 x 130	107 7/8" x 5 1/2" x 5 1/8"	14.00	30.86	9.987	3.044	26.665	293.318
A12	U460011A1201F	110	4 5/16"	4000	157 1/2"	10	4050 x 140 x 130	159 1/2" x 5 1/2" x 5 1/8"	19.00	41.89	9.815	2.992	39.260	392.600
A12	U460012A121RF	120	4 3/4"	2670	105 1/8"	10	2740 x 140 x 130	107 7/8" x 5 1/2" x 5 1/8"	14.00	30.86	9.719	2.962	25.950	259.497
A12	U460012A1201F	120	4 3/4"	4000	157 1/2"	10	4050 x 140 x 130	159 1/2" x 5 1/2" x 5 1/8"	20.50	45.19	9.367	2.855	37.468	374.680
A12	U460015A121RF	150	5 7/8"	2670	105 1/8"	9	2740 x 160 x 120	107 7/8" x 6 1/4" x 4 3/4"	15.00	33.07	10.599	3.231	28.299	254.694
A12	U460015A1201F	150	5 7/8"	4000	157 1/2"	9	4050 x 160 x 120	159 1/2" x 6 1/4" x 4 3/4"	22.50	49.60	10.537	3.212	42.148	379.332
											AVAILABLE FROM ITALY MSRP PRICING USD			
A12	R460017A1201F	170	6 11/16"	4000	157 1/2"		<<<<< MINIMUM ORDER AND PACKAGING TO BE CONFIRMED >>>>>				13.281	4.048	53.124	
A12	R460018A1201F	180	7 1/16"	4000	157 1/2"		<<<<< MINIMUM ORDER AND PACKAGING TO BE CONFIRMED >>>>>				14.043	4.280	56.172	
706	U46001070601R	100	3 15/16"	2670	105 1/8"	10	2740 x 145 x 110	107 7/8" x 5 3/4" x 4 3/8"	11.50	25.35	7.269	2.216	19.408	194.082
706	U46001070601	100	3 15/16"	4000	157 1/2"	10	4050 x 145 x 110	159 1/2" x 5 3/4" x 4 3/8"	18.00	39.68	7.152	2.180	28.608	286.080
706	U46001570601R	150	5 7/8"	2670	105 1/8"	9	2740 x 160 x 120	107 7/8" x 6 1/4" x 4 3/4"	15.00	33.07	8.410	2.563	22.455	202.092
706	U46001570601	150	5 7/8"	4000	157 1/2"	9	4050 x 160 x 120	159 1/2" x 6 1/4" x 4 3/4"	22.50	49.60	8.894	2.711	35.576	320.184
											AVAILABLE FROM ITALY MSRP PRICING USD			
A13	R460010A1301F	100	3 15/16"	4000	157 1/2"		<<<<< MINIMUM ORDER AND PACKAGING TO BE CONFIRMED >>>>>				7.385	2.251	29.540	
A13	R460015A1301F	150	5 7/8"	4000	157 1/2"		<<<<< MINIMUM ORDER AND PACKAGING TO BE CONFIRMED >>>>>				9.333	2.845	37.332	

scilm AMERICA

TOE KICK AND ACCESSORIES

COUP DE PIED ET ACCESSOIRES

ZOCALO Y ACCESORIOS

425

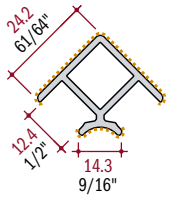

90° FOILED PVC CORNER FOR TOE KICK
A11 Aluminum Foil Clear
A12 Aluminum Foil Stainless
A13 Aluminum Foil Chrome
Other Colors and Sizes Available FROM ITALY

COIN 90° EN PVC RECOUVERT POUR COUP DE PIED
A11 Feuille Aluminium Clair
A12 Feuille Aluminium Inox
A13 Feuille Aluminium Chrome
Autres Couleurs et Dimensions Disponibles DE L'ITALIE

ANGULO 90ºPVC REVESTIDO FOLIO DE ALUMINIO PARA ZOCALO
A11 Folio de Aluminio Claro
A12 Folio Aluminio Inox
A13 Folio de Aluminio Cromado
Otros Colores y Dimensiones DE ITALIA

COLORS	ITEM NUMBER	HEIGHT		PCS PER BOX	BOX DIMENSION		BOX WEIGHT		STOCK IN AMERICA MSRP PRICING USD	
					mm	inch				
		mm	inch		W x D x H	W x D x H	KG	LB	EACH	BOX
A11	U425C-97A11SF	100	3 15/16"	30	225 x 165 x 140	8 7/8" x 6 1/2" x 5 1/2"	0.80	1.76	2.546	76.380
A11	U425C107A11SF	110	4 5/16"	30	225 x 165 x 140	8 7/8" x 6 1/2" x 5 1/2"	0.85	1.87	2.905	87.150
A11	U425C117A11SF	120	4 3/4"	30	225 x 165 x 140	8 7/8" x 6 1/2" x 5 1/2"	0.90	1.98	2.911	87.330
A11	U425C147A11SF	150	5 7/8"	30	225 x 165 x 140	8 7/8" x 6 1/2" x 5 1/2"	1.20	2.65	3.469	104.070
A12	U425C-97A12SF	100	3 15/16"	30	225 x 165 x 140	8 7/8" x 6 1/2" x 5 1/2"	0.80	1.76	2.607	78.210
A12	U425C107A12SF	110	4 5/16"	30	225 x 165 x 140	8 7/8" x 6 1/2" x 5 1/2"	0.85	1.87	2.983	89.490
A12	U425C117A12SF	120	4 3/4"	30	225 x 165 x 140	8 7/8" x 6 1/2" x 5 1/2"	0.90	1.98	2.983	89.490
A12	U425C147A12SF	150	5 7/8"	30	225 x 165 x 140	8 7/8" x 6 1/2" x 5 1/2"	1.20	2.65	3.314	99.420

426

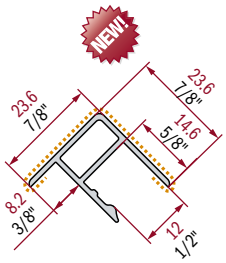

90° FOILED PVC CORNER FOR TOE KICK
A11 Aluminum Foil Clear
A12 Aluminum Foil Stainless
A13 Aluminum Foil Chrome
706 Black Matt (without Protective Film)
Other Colors and Sizes Available FROM ITALY

COIN 90° EN PVC RECOUVERT POUR COUP DE PIED
A11 Feuille Aluminium Clair
A12 Feuille Aluminium Inox
A13 Feuille Aluminium Chrome
706 Noir Mat (sans Pellicule Protectrice)
Autres Couleurs et Dimensions Disponibles DE L'ITALIE

ANGULO 90ºPVC REVESTIDO FOLIO DE ALUMINIO PARA ZOCALO
A11 Folio de Aluminio Claro
A12 Folio de Aluminio Inox
A13 Folio de Aluminio Cromado
706 Negro mate (sin Película Protectora)
Otras Dimensiones Disponibles DE ITALIA

COLORS	ITEM NUMBER	HEIGHT		PCS PER BOX	BOX DIMENSION		BOX WEIGHT		STOCK IN AMERICA MSRP PRICING USD			
					mm	inch						
		mm	inch		W x D x H	W x D x H	KG	LB	METER	FOOT	EACH	BOX
A11	U426A-97A11SF	100	3 15/16"	30	215 x 160 x 130	8 1/2" x 6 1/4" x 5 1/8"	0.60	1.32			1.849	55.470
A11	U426A107A11SF	110	4 5/16"	30	215 x 160 x 130	8 1/2" x 6 1/4" x 5 1/8"	0.65	1.43			1.917	57.510
A11	U426A117A11SF	120	4 3/4"	30	225 x 160 x 130	8 7/8" x 6 1/4" x 5 1/8"	0.70	1.54			2.038	61.140
A11	U426A147A11SF	150	5 7/8"	30	215 x 160 x 130	8 1/2" x 6 1/4" x 5 1/8"	0.85	1.87			2.319	69.570
									AVAILABLE FROM ITALY MSRP PRICING USD			
A11	426A-167A11SF	170	6 11/16"		<<<<< MINIMUM ORDER AND PACKAGING TO BE CONFIRMED >>>>>						1.819	
A11	426A-177A11SF	180	7 1/16"		<<<<< MINIMUM ORDER AND PACKAGING TO BE CONFIRMED >>>>>						1.941	
A12	U426A-97A12SF	100	3 15/16"	30	215 x 160 x 130	8 1/2" x 6 1/4" x 5 1/8"	0.60	1.32			1.913	57.390
A12	U426A107A12SF	110	4 5/16"	30	215 x 160 x 130	8 1/2" x 6 1/4" x 5 1/8"	0.65	1.43			1.987	59.610
A12	U426A117A12SF	120	4 3/4"	30	215 x 160 x 130	8 1/2" x 6 1/4" x 5 1/8"	0.70	1.54			2.117	63.510
A12	U426A147A12SF	150	5 7/8"	30	215 x 160 x 130	8 1/2" x 6 1/4" x 5 1/8"	0.85	1.87			2.418	72.540
									AVAILABLE FROM ITALY MSRP PRICING USD			
A12	426A-167A12SF	170	6 11/16"		<<<<< MINIMUM ORDER AND PACKAGING TO BE CONFIRMED >>>>>						1.819	
A12	426A-177A12SF	180	7 1/16"		<<<<< MINIMUM ORDER AND PACKAGING TO BE CONFIRMED >>>>>						1.941	
706	U426A-97706SF	100	3 15/16"	30	215 x 160 x 130	8 1/2" x 6 1/4" x 5 1/8"	0.60	1.32			1.823	54.690
706	U426A147706SF	150	5 7/8"	30	215 x 160 x 130	8 1/2" x 6 1/4" x 5 1/8"	0.85	1.87			2.282	68.460
									AVAILABLE FROM ITALY MSRP PRICING USD			
A13	426A-97-A13SF	100	3 15/16"		<<<<< MINIMUM ORDER AND PACKAGING TO BE CONFIRMED >>>>>						1.316	
A13	426A-147A13SF	150	5 7/8"		<<<<< MINIMUM ORDER AND PACKAGING TO BE CONFIRMED >>>>>						1.786	

NEW! **NEW DESIGN WILL REPLACE CURRENT DESIGN WHEN CURRENT DESIGN INVENTORY IS OVER**

TOE KICK AND ACCESSORIES

VARIABLE FOILED ALUMINUM CORNER FOR TOE KICK
A11 Aluminum Foil Clear
A12 Aluminum Foil Stainless
Other Colors and Sizes Available FROM ITALY

COUP DE PIED ET ACCESSOIRES

COIN VARIABLE EN ALUMINIUM RECOUVERT POUR COUP DE PIED
A11 Feuille Aluminium Clair
A12 Feuille Aluminium Inox
Autres Couleurs et Dimensions Disponibles DE L'ITALIE

ZOCALO Y ACCESORIOS

ANGULOVARIABLE REVESTIDO EN ALUMINIO PARA ZOCALO
A11 Folio de Aluminio Claro
A12 Folio de Aluminio Inox
Otras Dimensiones Disponibles DE ITALIA

1356

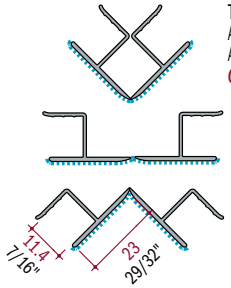

COLORS	ITEM NUMBER	HEIGHT mm	HEIGHT inch	PCS PER BOX	BOX DIMENSION mm W x D x H	BOX DIMENSION inch W x D x H	BOX WEIGHT KG	BOX WEIGHT LB	STOCK IN AMERICA MSRP PRICING USD EACH	STOCK IN AMERICA MSRP PRICING USD BOX
A11	U1356110A11SF	110	4 5/16"	30	220 x 165 x 140	8 5/8" x 6 1/2" x 5 1/2"	1.00	2.20	4.409	132.270
A11	U1356120A11SF	120	4 3/4"	30	220 x 165 x 140	8 5/8" x 6 1/2" x 5 1/2"	1.20	2.65	4.708	141.240
A12	U1356100A12SF	100	3 15/16"	30	220 x 165 x 140	8 5/8" x 6 1/2" x 5 1/2"	1.00	2.20	4.227	126.810
A12	U1356110A12SF	110	4 5/16"	30	220 x 165 x 140	8 5/8" x 6 1/2" x 5 1/2"	1.00	2.20	4.409	132.270
A12	U1356120A12SF	120	4 3/4"	30	220 x 165 x 140	8 5/8" x 6 1/2" x 5 1/2"	1.20	2.65	4.708	141.240
A12	U1356150A12SF	150	5 7/8"	30	220 x 165 x 140	8 5/8" x 6 1/2" x 5 1/2"	1.50	3.31	5.421	162.630

1357

NEW!

VARIABLE FOILED PVC CORNER FOR TOE KICK
A11 Aluminum Foil Clear
A12 Aluminum Foil Stainless
A13 Aluminum Foil Chrome
706 Black Matt (without Protective Film)
Other Colors and Sizes Available FROM ITALY

COIN VARIABLE EN PVC RECOUVERT POUR COUP DE PIED
A11 Feuille Aluminium Clair
A12 Feuille Aluminium Inox
A13 Feuille Aluminium Chrome
706 Noir Mat (sans Pellicule Protectrice)
Autres Couleurs et Dimensions Disponibles DE L'ITALIE

ANGULO VARIABLE EN PVC REVESTIDO PARA ZOCALO
A11 Folio de Aluminio Claro
A12 Folio de Aluminio Inox
A13 Folio de Aluminio Cromado
706 Negro mate (sin Película Protectora)
Otras Dimensiones Disponibles DE ITALIA

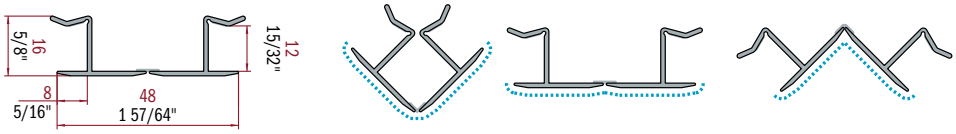

COLORS	ITEM NUMBER	HEIGHT mm	HEIGHT inch	PCS PER BOX	BOX DIMENSION mm W x D x H	BOX DIMENSION inch W x D x H	BOX WEIGHT KG	BOX WEIGHT LB	STOCK IN AMERICA MSRP PRICING USD EACH	STOCK IN AMERICA MSRP PRICING USD BOX
A11	U1357-97A11SF	100	3 15/16"	30	220 x 165 x 140	8 5/8" x 6 1/2" x 5 1/2"	1.00	2.20	3.518	105.540
A11	U1357-107A11SF	110	4 5/16"	30	220 x 165 x 140	8 5/8" x 6 1/2" x 5 1/2"	1.00	2.20	3.700	111.000
A11	U1357-117A11SF	120	4 3/4"	30	220 x 165 x 140	8 5/8" x 6 1/2" x 5 1/2"	1.20	2.65	3.867	116.010
A11	U1357-147A11SF	150	5 7/8"	30	220 x 165 x 140	8 5/8" x 6 1/2" x 5 1/2"	1.50	3.31	4.321	129.630
									AVAILABLE FROM ITALY MSRP PRICING USD	
A11	1357-167A11SF	170	6 11/16"		<<<<< MINIMUM ORDER AND PACKAGING TO BE CONFIRMED >>>>>				2.781	
A11	1357-177A11SF	180	7 1/16"		<<<<< MINIMUM ORDER AND PACKAGING TO BE CONFIRMED >>>>>				2.781	
A12	U1357-97A12SF	100	3 15/16"	30	220 x 165 x 140	8 5/8" x 6 1/2" x 5 1/2"	1.00	2.20	3.595	107.850
A12	U1357-107A12SF	110	4 5/16"	30	220 x 165 x 140	8 5/8" x 6 1/2" x 5 1/2"	1.00	2.20	3.784	113.520
A12	U1357-117A12SF	120	4 3/4"	30	220 x 165 x 140	8 5/8" x 6 1/2" x 5 1/2"	1.20	2.65	3.784	113.520
A12	U1357-147A12SF	150	5 7/8"	30	220 x 165 x 140	8 5/8" x 6 1/2" x 5 1/2"	1.50	3.31	4.434	133.020
									AVAILABLE FROM ITALY MSRP PRICING USD	
A12	1357-167A12SF	180	7 1/16"		<<<<< MINIMUM ORDER AND PACKAGING TO BE CONFIRMED >>>>>				2.909	
A12	1357-177A12SF	170	6 11/16"		<<<<< MINIMUM ORDER AND PACKAGING TO BE CONFIRMED >>>>>				2.909	
706	U1357-97706SF	100	3 15/16"	30	220 x 165 x 140	8 5/8" x 6 1/2" x 5 1/2"	1.00	2.20	4.017	120.510
706	U1357147706SF	150	5 7/8"	30	220 x 165 x 140	8 5/8" x 6 1/2" x 5 1/2"	1.50	3.31	4.744	142.320
A13	1357-97-A13SF	100	3 15/16"		<<<<< MINIMUM ORDER AND PACKAGING TO BE CONFIRMED >>>>>				1.863	
A13	1357-147A13SF	150	5 7/8"		<<<<< MINIMUM ORDER AND PACKAGING TO BE CONFIRMED >>>>>				2.507	

NEW! **NEW DESIGN WILL REPLACE CURRENT DESIGN WHEN CURRENT DESIGN INVENTORY IS OVER**

4072

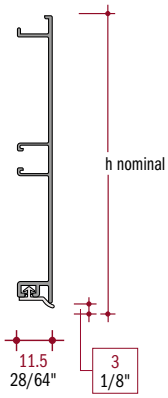

TOE KICK AND ACCESSORIES

PLAIN ALUMINUM TOE KICK
50S Aluminum Clear Anodize
SB1 Aluminum Stainless Anodize
LU5 Aluminum Chrome Anodize
Other Colors and Sizes Available FROM ITALY

COUP DE PIED ET ACCESSOIRES

COUP DE PIED EN ALUMINIUM LISSE
50S Aluminium Clair Anodisé
SB1 Aluminium Inox Anodisé
LU5 Aluminium Chrome Anodisé
Autres Couleurs et Dimensions Disponibles DE L'ITALIE

ZOCALO Y ACCESORIOS

ZOCALO DE ALUMINIO MACIZO
50S Aluminio Anodizado Claro
SB1 Aluminio Inox Anodizado
LU5 Aluminio Anodizado Chrome
Otras Colores y Dimensiones Disponibles DE ITALIA

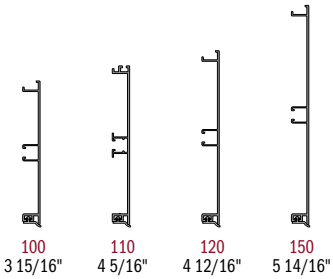

COLORS	ITEM NUMBER	HEIGHT		LENGTH		PCS PER BOX	BOX DIMENSION		BOX WEIGHT		STOCK IN AMERICA MSRP PRICING USD			
							mm	inch						
		mm	inch	mm	inch		W x D x H	W x D x H	KG	LB	METER	FOOT	EACH	BOX
50S	U4072G50S1RFA	100	3 15/16"	2670	105 1/8"	10	2740 x 120 x 90	107 7/8" x 4 3/4" x 3 1/2"	13.50	29.76	16.806	5.122	44.872	448.720
50S	U4072G50S1UFA	100	3 15/16"	4100	161 7/16"	10	4250 x 120 x 90	167 3/8" x 4 3/4" x 3 1/2"	20.50	45.19	15.077	4.595	61.816	618.157
50S	U4070I50S01RF	110	4 5/16"	2670	105 1/8"	10	2740 x 140 x 90	107 7/8" x 5 1/2" x 3 1/2"	17.00	37.48	22.478	6.851	60.016	600.163
50S	U4070I50S01UF	110	4 5/16"	4100	161 7/16"	10	4250 x 140 x 90	167 3/8" x 5 1/2" x 3 1/2"	26.00	57.32	21.857	6.662	89.614	896.137
50S	U4072M50S1RFA	120	4 3/4"	2670	105 1/8"	10	2740 x 140 x 90	107 7/8" x 5 1/2" x 3 1/2"	15.00	33.07	18.706	5.702	49.945	499.450
50S	U4072M50S1UFA	120	4 3/4"	4100	161 7/16"	10	4250 x 140 x 90	167 3/8" x 5 1/2" x 3 1/2"	23.00	50.71	17.077	5.205	70.016	700.157
50S	U4072Q50S1RFA	150	5 7/8"	2670	105 1/8"	10	2740 x 170 x 90	107 7/8" x 6 3/4" x 3 1/2"	22.50	49.6	22.339	6.809	59.645	596.451
50S	U4072Q50S1UFA	150	5 7/8"	4100	161 7/16"	10	4250 x 170 x 90	167 3/8" x 6 3/4" x 3 1/2"	34.50	76.06	20.287	6.183	83.177	831.767
SB1	U4072GSB101RF	100	3 15/16"	2670	105 1/8"	10	2740 x 120 x 90	107 7/8" x 4 3/4" x 3 1/2"	13.50	29.76	30.852	9.404	82.375	823.748
SB1	U4072GSB101UF	100	3 15/16"	4100	161 7/16"	10	4250 x 120 x 90	167 3/8" x 4 3/4" x 3 1/2"	20.50	45.19	30.006	9.146	123.025	1230.246
SB1	U4070ISB101RF	110	4 5/16"	2670	105 1/8"	10	2740 x 140 x 90	107 7/8" x 5 1/2" x 3 1/2"	17.00	37.48	34.970	10.659	93.370	933.699
SB1	U4070ISB101UF	110	4 5/16"	4100	161 7/16"	10	4250 x 140 x 90	167 3/8" x 5 1/2" x 3 1/2"	26.00	57.32	34.214	10.428	140.277	1402.774
SB1	U4072MSB101RF	120	4 3/4"	2670	105 1/8"	10	2740 x 140 x 90	107 7/8" x 5 1/2" x 3 1/2"	15.00	33.07	32.843	10.011	87.691	876.908
SB1	U4072MSB101UF	120	4 3/4"	4100	161 7/16"	10	4250 x 140 x 90	167 3/8" x 5 1/2" x 3 1/2"	23.00	50.71	31.815	9.697	130.442	1304.415
SB1	U4072QSB101RF	150	5 7/8"	2670	105 1/8"	10	2740 x 170 x 90	107 7/8" x 6 3/4" x 3 1/2"	22.50	49.60	39.061	11.906	104.293	1042.929
SB1	U4072QSB101UF	150	5 7/8"	4100	161 7/16"	10	4250 x 170 x 90	167 3/8" x 6 3/4" x 3 1/2"	34.50	76.06	37.262	11.357	152.774	1527.742
											AVAILABLE FROM ITALY MSRP PRICING USD			
LU5	R4072GLU501UF	100	3 15/16"	4100	161 7/16"		<<<<< MINIMUM ORDER AND PACKAGING TO BE CONFIRMED >>>>>				20.537	6.260	84.202	
LU5	R4072QLU501UF	150	5 7/8"	4100	161 7/16"		<<<<< MINIMUM ORDER AND PACKAGING TO BE CONFIRMED >>>>>				27.593	8.410	113.131	

TOE KICK AND ACCESSORIES

COUP DE PIED ET ACCESSOIRES

ZOCALO Y ACCESORIOS

1353

90° ALUMINUM CORNER FOR TOE KICK
50S Aluminum Clear Anodize
SB1 Aluminum Stainless Anodize
LU5 Aluminum Chrome Anodize
Other Colors and Sizes Available FROM ITALY

COIN 90° EN ALUMINIUM POUR COUP DE PIED
50S Aluminium Clair Anodisé
SB1 Aluminium Inox Anodisé
LU5 Aluminium Chrome Anodisé
Autres Couleurs et Dimensions Disponibles DE L'ITALIE

ANGULO 90 ° EN ALUMINIO PARA ZOCALO
50S Aluminio Anodizado Claro
SB1 Aluminio Inox Anodizado
LU5 Aluminio Anodizado Chrome
Otras Terminaciones y Dimensiones Disponibles DE ITALIA

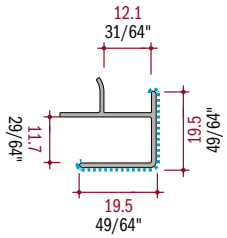

COLORS	ITEM NUMBER	HEIGHT		PCS PER BOX	BOX DIMENSION		BOX WEIGHT		STOCK IN AMERICA MSRP PRICING USD	
					mm	inch				
		mm	inch		W x D x H	W x D x H	KG	LB	EACH	BOX
50S	U135350S/SF01	100	3 15/16"	20	220 x 165 x 140	8 5/8" x 6 1/2" x 5 1/2"	0.50	1.10	2.039	40.780
50S	U135350S/SF02	110	4 5/16"	20	220 x 165 x 140	8 5/8" x 6 1/2" x 5 1/2"	0.50	1.10	2.347	46.940
50S	U135350S/SF03	120	4 3/4"	20	220 x 165 x 140	8 5/8" x 6 1/2" x 5 1/2"	0.60	1.32	2.235	44.700
50S	U135350S/SF06	150	5 7/8"	20	220 x 165 x 140	8 5/8" x 6 1/2" x 5 1/2"	0.70	1.54	2.442	48.840
SB1	U1353SB1/SF01	100	3 15/16"	20	220 x 165 x 140	8 5/8" x 6 1/2" x 5 1/2"	0.50	1.10	3.293	65.860
SB1	U1353SB1/SF02	110	4 5/16"	20	220 x 165 x 140	8 5/8" x 6 1/2" x 5 1/2"	0.50	1.10	3.460	69.200
SB1	U1353SB1/SF03	120	4 3/4"	20	220 x 165 x 140	8 5/8" x 6 1/2" x 5 1/2"	0.60	1.32	3.710	74.200
SB1	U1353SB1/SF06	150	5 7/8"	20	220 x 165 x 140	8 5/8" x 6 1/2" x 5 1/2"	0.70	1.54	4.251	85.020
									AVAILABLE FROM ITALY MSRP PRICING USD	
LU5	1353LU5/SF01	100	3 15/16"		<<<<< MINIMUM ORDER AND PACKAGING TO BE CONFIRMED >>>>>				1.835	
LU5	1353LU5/SF06	150	5 7/8"		<<<<< MINIMUM ORDER AND PACKAGING TO BE CONFIRMED >>>>>				2.407	

1354

VARIABLE ALUMINUM CORNER FOR TOE KICK
50S Aluminum Clear Anodize
SB1 Aluminum Stainless Anodize
LU5 Aluminum Chrome Anodize
Other Colors and Sizes Available FROM ITALY

COIN VARIABLE EN ALUMINIUM POUR COUP DE PIED
50S Aluminium Clair Anodisé
SB1 Aluminium Inox Anodisé
LU5 Aluminium Chrome Anodisé
Autres Couleurs et Dimensions Disponibles DE L'ITALIE

ANGULO VARIABLE EN ALUMINIO PARA ZOCALO
50S Aluminio Anodizado Claro
SB1 Aluminio Inox Anodizado
LU5 Aluminio Anodizado Chrome
Otros Colores y Dimensiones Disponibles DE ITALIA

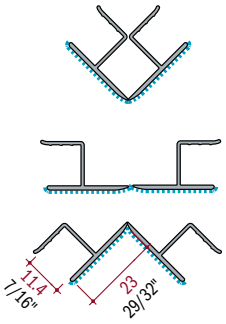

COLORS	ITEM NUMBER	HEIGHT		PCS PER BOX	BOX DIMENSION		BOX WEIGHT		STOCK IN AMERICA MSRP PRICING USD	
					mm	inch				
		mm	inch		W x D x H	W x D x H	KG	LB	EACH	BOX
50S	U135410050SSF	100	3 15/16"	30	220 x 165 x 140	8 5/8" x 6 1/2" x 5 1/2"	0.50	1.10	3.573	107.190
50S	U135411050SSF	110	4 5/16"	30	220 x 165 x 140	8 5/8" x 6 1/2" x 5 1/2"	0.60	1.32	3.956	118.680
50S	U135412050SSF	120	4 3/4"	30	220 x 165 x 140	8 5/8" x 6 1/2" x 5 1/2"	0.60	1.32	4.030	120.900
50S	U135415050SSF	150	5 7/8"	30	220 x 165 x 140	8 5/8" x 6 1/2" x 5 1/2"	0.70	1.54	4.895	146.850
SB1	U1354100SB1SF	100	3 15/16"	30	220 x 165 x 140	8 5/8" x 6 1/2" x 5 1/2"	0.50	1.10	4.500	135.000
SB1	U1354110SB1SF	110	4 5/16"	30	220 x 165 x 140	8 5/8" x 6 1/2" x 5 1/2"	0.60	1.32	5.041	151.230
SB1	U1354120SB1SF	120	4 3/4"	30	220 x 165 x 140	8 5/8" x 6 1/2" x 5 1/2"	0.60	1.32	5.139	154.170
SB1	U1354150SB1SF	150	5 7/8"	30	220 x 165 x 140	8 5/8" x 6 1/2" x 5 1/2"	0.70	1.54	6.363	190.890
									AVAILABLE FROM ITALY MSRP PRICING USD	
LU5	1354-100LU5SF	100	3 15/16"		<<<<< MINIMUM ORDER AND PACKAGING TO BE CONFIRMED >>>>>				3.596	
LU5	1354-150LU5SF	150	5 7/8"		<<<<< MINIMUM ORDER AND PACKAGING TO BE CONFIRMED >>>>>				5.255	

scilm AMERICA

WE MAKE THE DIFFERENCE IN THE KITCHEN

“GOLA" PROFILE

"GOLA" PROFILE

Why...
It offers a practical way to design a "European handle free" kitchen

- Innovative design
- Easier to clean
- Safety feature: no handles exceeding the doors
- Lower cost than traditional handles

PROFILÉ "GOLA"

Pourquoi...
Il offre un moyen pratique de concevoir une cuisine "Européenne sans poignée"

- *Conception innovatrice*
- *Plus facile à nettoyer*
- *Caractéristique sécurité: aucune poignée dépassant les portes*
- *Coûts inférieur aux poignées traditionnel*

PERFIL "GOLA"

Por qué...
Oferece un método practico para diseñar una cocina a la Europea sin manijas o agarraderas.

- Diseño innovador
- Más fácil de limpiar
- Elemento de seguridad: no existen manijas que sobresalgan de las puertas
- Cuesta menos que las manijas tradicionales

NEW QUICK-FIXING SUPPORT GOLA PROFILE

1 DOWELED SUPPORT

2 PUSH SUPPORT IN

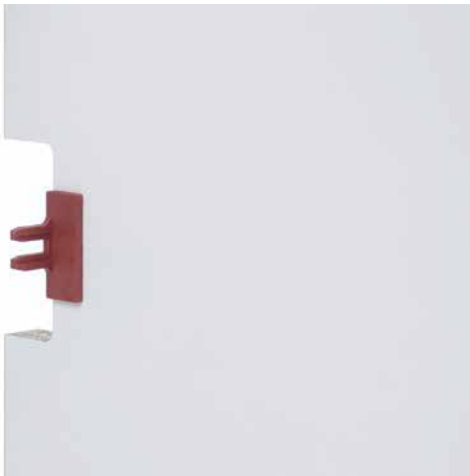

3 ADD “GOLA” PROFILE

4 ADD FIXING CLIP

5 TURN CLIP

6 PUSH AND LOCK

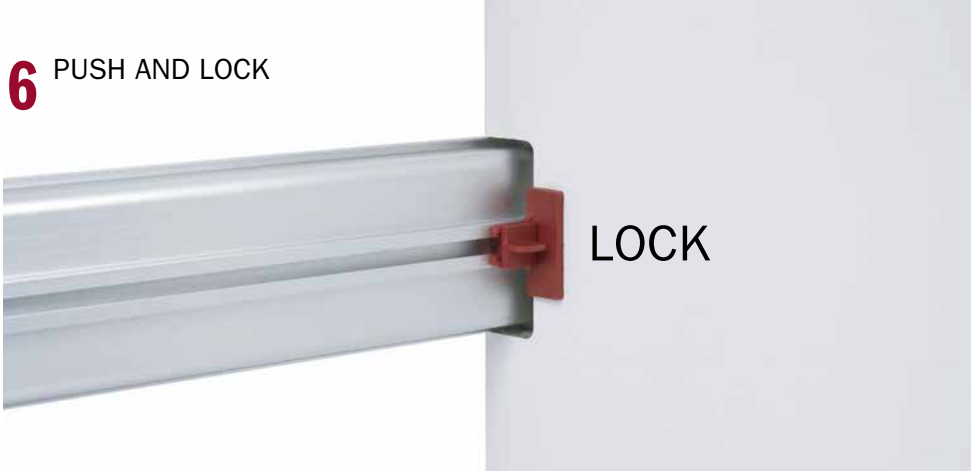

8006

Horizontal L shape "GOLA" profile for application under the countertop

Technical Specifications...
- Material: Aluminum
- Performance: Aluminum extrusion with high quality anodized finishes
- Environment: 100% recyclable materials

Spécifications Techniques...
- *Matériel: Aluminium*
- *Performance: Extrusion d'aluminium avec finitions anodisées de haute qualité*
- *Environnement: Matériaux 100% recyclables*

Especificaciones Técnicas...
- Material: Aluminio
- Rendimiento: Extrusión de aluminio con acabados anodizado de alta calidad
- Medio Ambiente: Materiales 100% reciclables

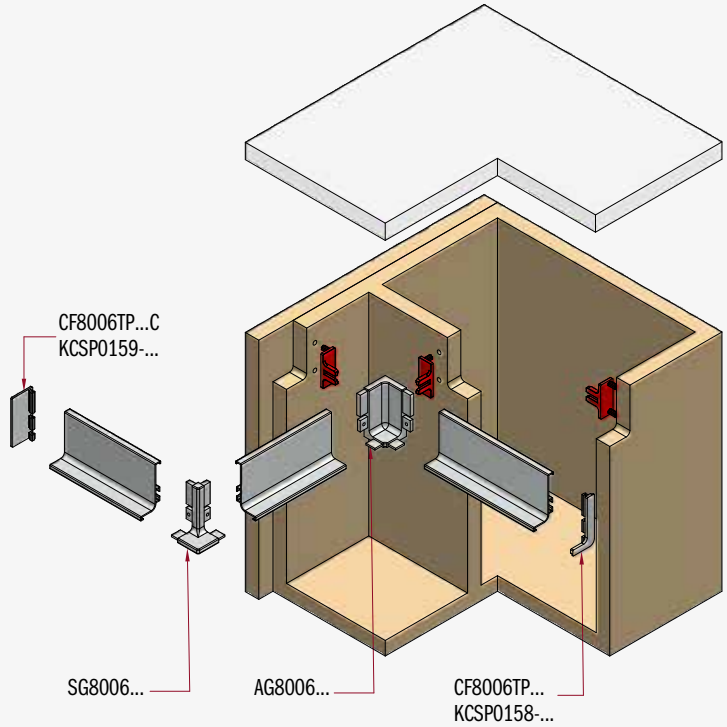

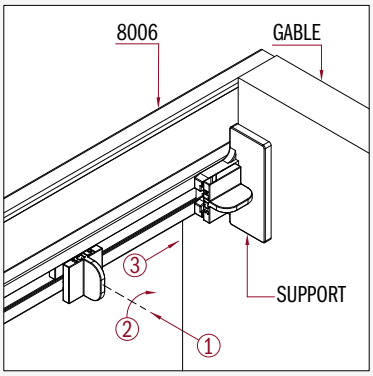

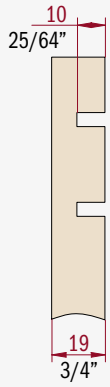

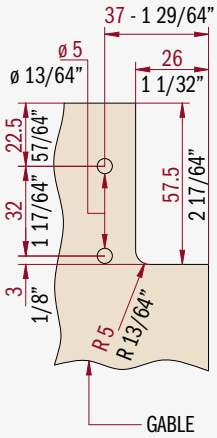

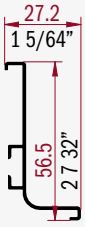

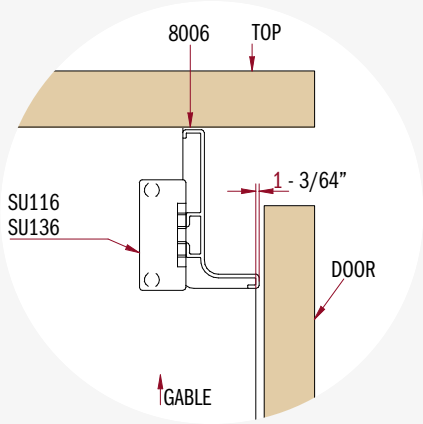

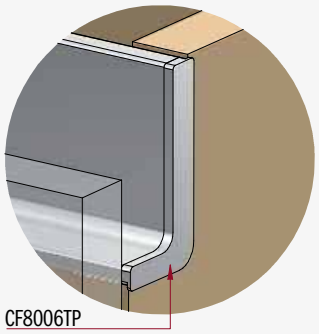

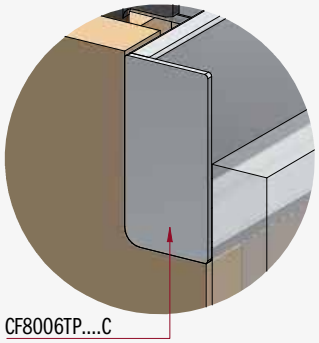

8007

Horizontal C shape "GOLA" profile for application inbetween the drawers

Technical Specifications...
- Material: Aluminum
- Performance: Aluminum extrusion with high quality anodized finishes
- Environment: 100% recyclable materials

Spécifications Techniques...
- *Matériel: Aluminium*
- *Performance: Extrusion d'aluminium avec finitions anodisées de haute qualité*
- *Environnement: Matériaux 100% recyclables*

Especificaciones Técnicas...
- Material: Aluminio
- Rendimiento: Extrusión de aluminio con acabados anodizado de alta calidad
- Medio Ambiente: Materiales 100% reciclables

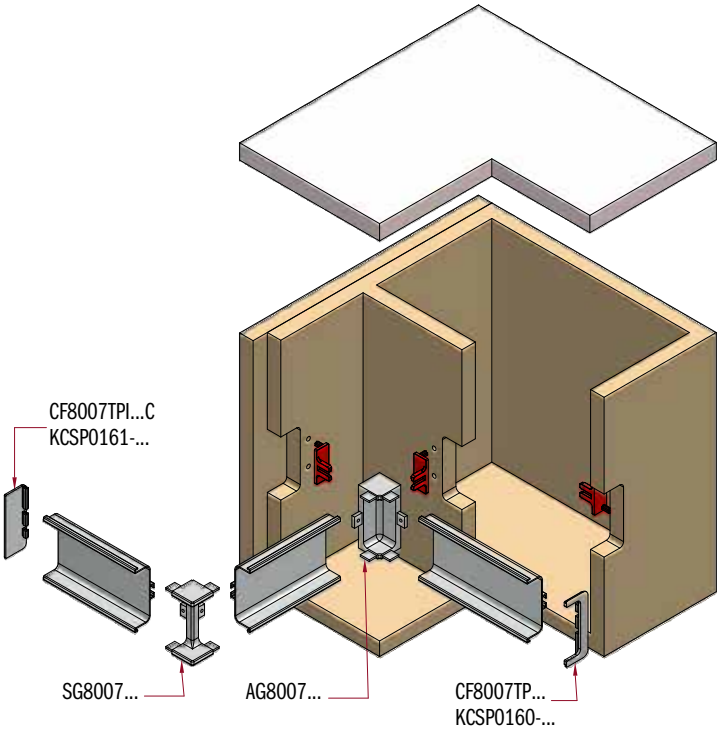

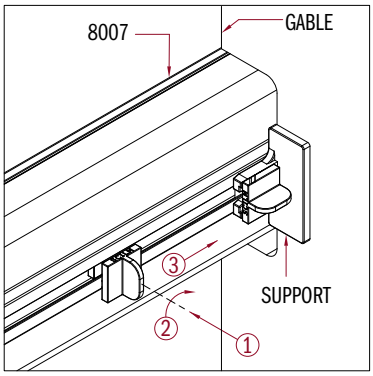

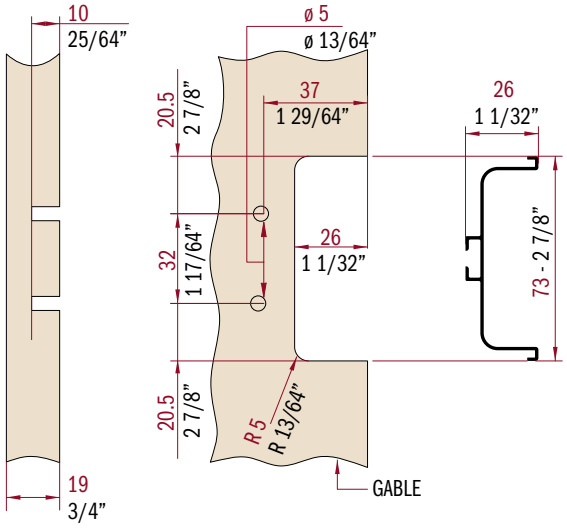

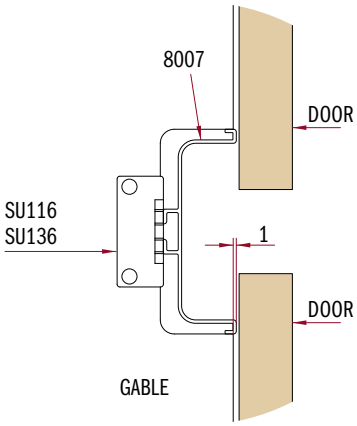

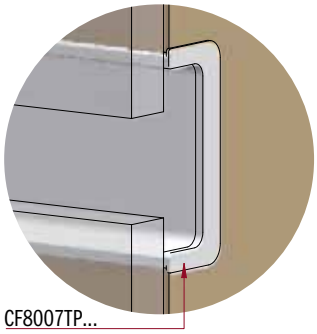

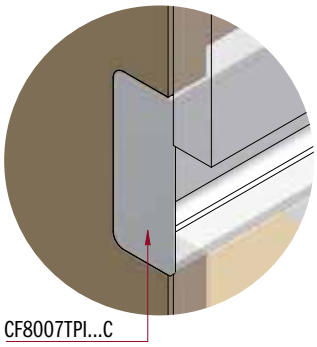

How to calculate the door's dimensions

regular box

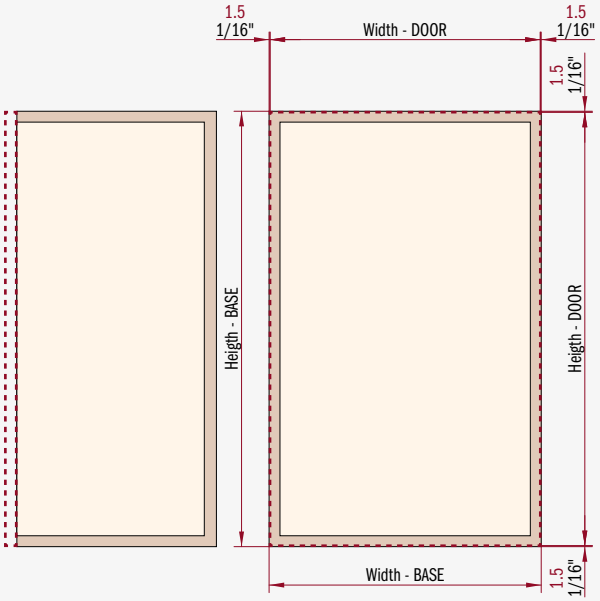

DOOR CALCULATION :
H door = Heigth base – 3mm , H door = Heigth base – 1/8"
W door = Width base – 3mm , W door = Width base – 1/8"

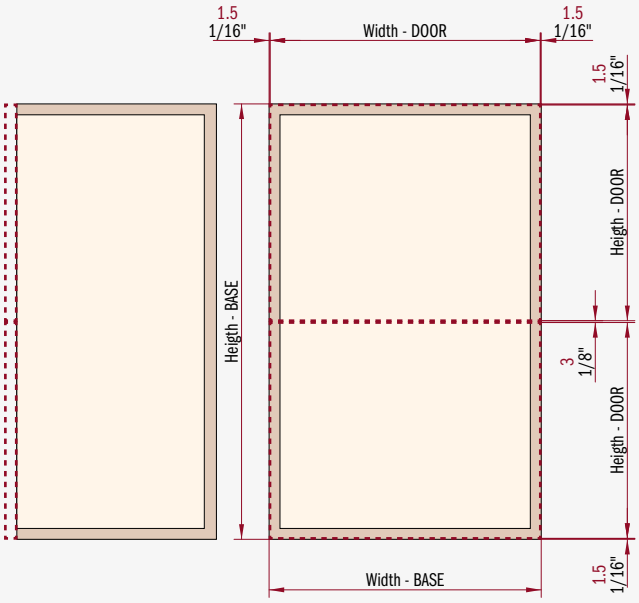

DOOR CALCULATION :
H door = (Heigth base – 6mm) / 2 , H door = (Heigth base – 5/64") / 2
W door = Width base – 3mm , W door = Width base – 1/8"

box with "GOLA PROFILE"

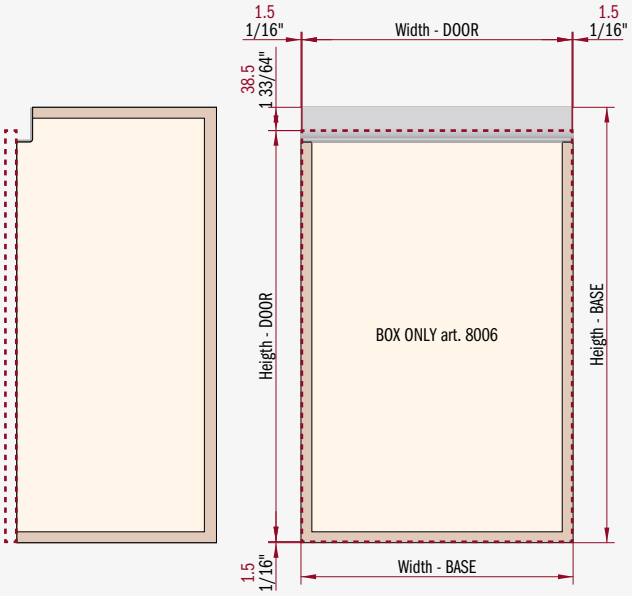

DOOR CALCULATION :
H door = Heigth base – 40mm , H door = Heigth base – 1 37/64"
W door = Width base – 3mm , W door = Width base – 1/8"

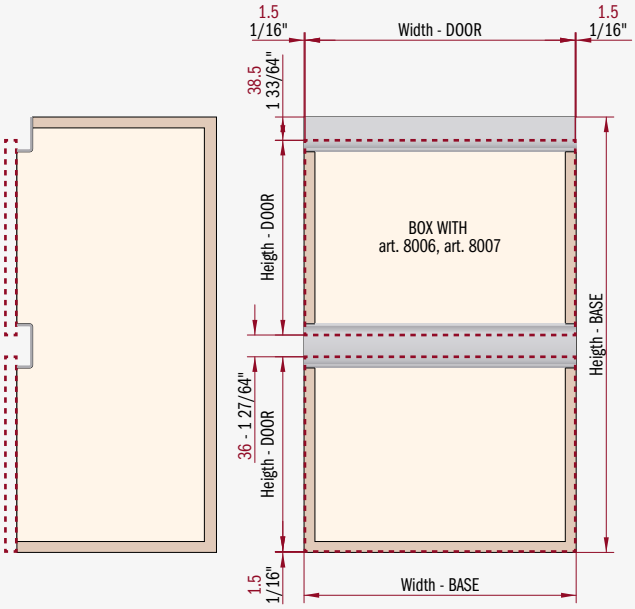

DOOR CALCULATION :
H door = (Heigth base – 76mm) / 2 , H door = (Heigth base – 2 63/64") / 2
W door = Width base – 3mm , W door = Width base – 1/8"

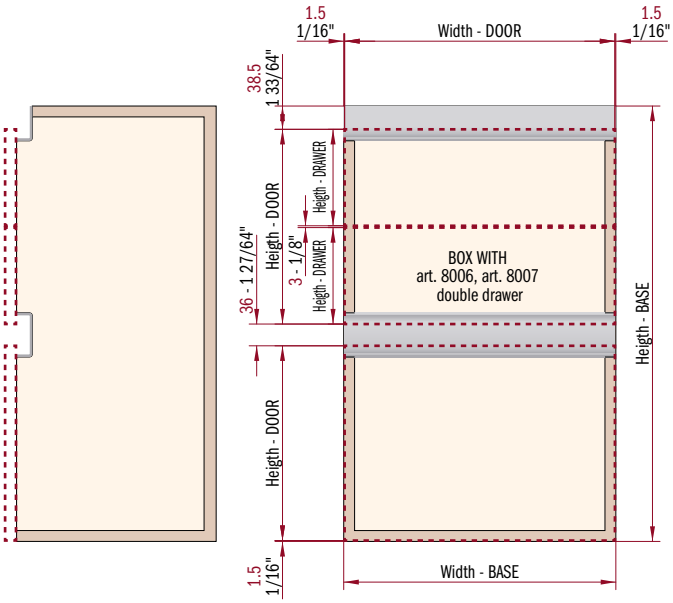

DOOR and DRAWER CALCULATION :
H door = (Heigth base – 76mm) / 2 , H door = (Heigth base – 2 63/64") / 2
H drawer = (H door – 3) / 2 , H drawer = (H door – 1/8") / 2
W door/drawer = Width base – 3mm , W door/drawer = Width base – 1/8"

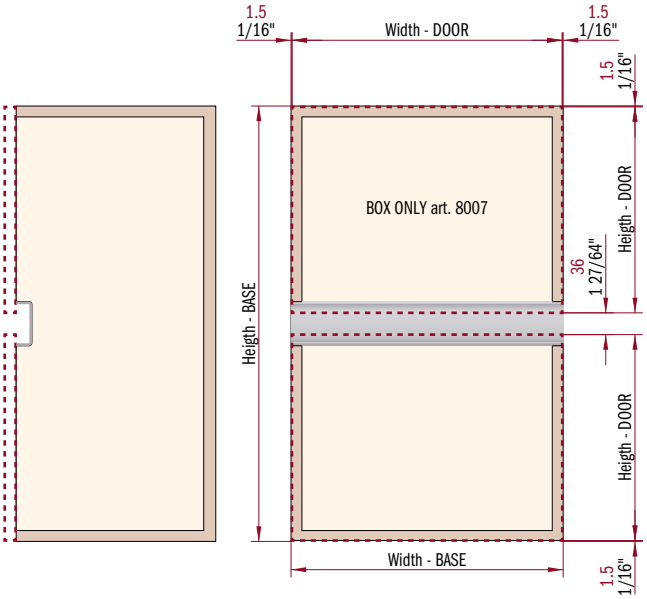

DOOR CALCULATION :
H door = (Heigth base – 39mm) / 2 , H door = (Heigth base – 1 17/32") / 2
W door = Width base – 3mm , W door = Width base – 1 /8"

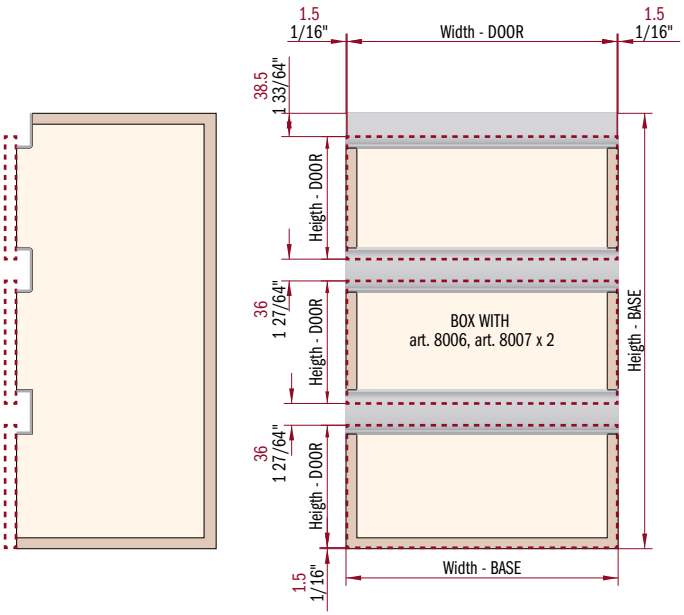

DOOR CALCULATION :
H door = (Heigth base – 112mm) / 3 , H door = (Heigth base – 4 13/32") / 3
W door = Width base – 3mm , W door = Width base – 1/8"

8006

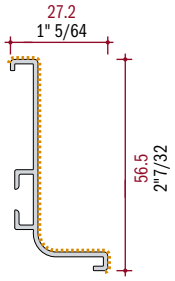

"GOLA" HORIZONTAL ALUMINUM SPACER CHANNEL PROFILE FOR BASE CABINET
50S Aluminum Clear Anodize
S2I Aluminum Titanium Anodize
SB1 Aluminum Stainless Anodize
V01 Aluminum White Semi-Gloss Powder Coated
V12 Aluminum Black Matt Powder Coated
LU5 Aluminum Chrome Anodize
Other Colors and Lengths Available FROM ITALY

"GOLA" PROFILÉ D'ESPACEMENT HORIZONTALE EN ALUMINIUM POUR ARMOIRE DU BAS
50S Aluminium Clair Anodisé
S2I Aluminium Titanium Anodisé
SB1 Aluminium Inox Anodisé
V01 Aluminium Blanc Semi-Lustre Peint à Poudre
V12 Aluminium Noir Mat Peint à Poudre
LU5 Aluminium Chrome Anodisé
Autres Couleurs et Longueurs Disponibles DE L'ITALIE

PERFIL GOLA HORIZONTAL EN ALUMINIO PARA MUEBLE BAJO
50S Aluminio Anodizado Claro
S2I Aluminio Anodizado Titanio
SB1 Aluminio Anodizado Inox
V01 Aluminio Blanco Semi-Brillo Barnizado
V12 Aluminio Negro Mate Barnizado
LU5 Aluminio Anodizado Cromo
Otros Colores y Dimensiones DE ITALIA

COLORS	ITEM NUMBER	LENGTH mm	LENGTH inch	PCS PER BOX	BOX DIMENSION mm W x D x H	BOX DIMENSION inch W x D x H	BOX WEIGHT KG	BOX WEIGHT LB	STOCK IN AMERICA MSRP PRICING USD METER	FOOT	EACH	BOX
50S	U800650SL27	2670	105 1/8"	10	2740 x 125 x 95	107 7/8" x 4 7/8" x 3 3/4"	9.50	20.94	15.056	4.589	40.200	401.995
50S	U800650SL41	4100	161 7/16"	10	4250 x 125 x 95	167 3/8" x 4 7/8" x 3 3/4"	15.50	34.17	14.621	4.456	59.946	599.461
S2I	U8006S2IL27	2670	105 1/8"	10	2740 x 125 x 95	107 7/8" x 4 7/8" x 3 3/4"	9.50	20.94	21.437	6.534	57.237	572.368
S2I	U8006S2IL41	4100	161 7/16"	10	4250 x 125 x 95	167 3/8" x 4 7/8" x 3 3/4"	15.50	34.17	20.086	6.122	82.353	823.526
SB1	U8006SB1L27	2670	105 1/8"	10	2740 x 125 x 95	107 7/8" x 4 7/8" x 3 3/4"	9.50	20.94	21.434	6.533	57.229	572.288
SB1	U8006SB1L41	4100	161 7/16"	10	4250 x 125 x 95	167 3/8" x 4 7/8" x 3 3/4"	15.50	34.17	20.932	6.380	85.821	858.212
V01	U8006V01L27	2670	105 1/8"	10	2740 x 125 x 95	107 7/8" x 4 7/8" x 3 3/4"	9.50	20.94	15.205	4.634	40.597	405.974
V01	U8006V01L41	4100	161 7/16"	10	4250 x 125 x 95	167 3/8" x 4 7/8" x 3 3/4"	15.50	34.17	14.767	4.501	60.545	605.447
V12	U8006V12L27	2670	105 1/8"	10	2740 x 125 x 95	107 7/8" x 4 7/8" x 3 3/4"	9.50	20.94	15.513	4.728	41.420	414.197
V12	U8006V12L41	4100	161 7/16"	10	4250 x 125 x 95	167 3/8" x 4 7/8" x 3 3/4"	15.50	34.17	15.069	4.593	61.783	617.829
									AVAILABLE FROM ITALY MSRP PRICING USD			
LU5	8006LU5L41	4100	161 7/16"	<<<<< MINIMUM ORDER AND PACKAGING TO BE CONFIRMED >>>>>					15.061	4.591	61.750	

GG8006

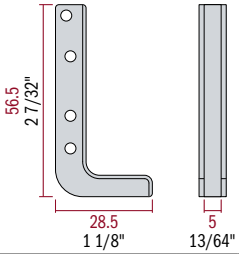

ALUMINUM LINEAR JUNCTION FOR GOLA 8006
50S Aluminum Clear Anodize
S2I Aluminum Titanium Anodize
SB1 Aluminum Stainless Anodize
V01 Aluminum White Semi-Gloss Powder Coated
V12 Aluminum Black Matt Powder Coated
LU5 Aluminum Chrome Anodize
Other Colors Available FROM ITALY

JONCTION LINÉAIRE EN ALUMINIUM POUR GOLA 8006
50S Aluminium Clair Anodisé
S2I Aluminium Titanium Anodisé
SB1 Aluminium Inox Anodisé
V01 Aluminium Blanc Semi-Lustre Peint à Poudre
V12 Aluminium Noir Mat Peint à Poudre
LU5 Aluminium Chrome Anodisé
Autres Couleurs Disponibles DE L'ITALIE

UNIÓN LINEAL EN ALUMINIO PARA GOLA 8006
50S Aluminio Anodizado Claro
S2I Aluminio Anodizado Titanio
SB1 Aluminio Anodizado Inox
V01 Aluminio Blanco Semi-Brillo Barnizado
V12 Aluminio Negro Mate Barnizado
LU5 Aluminio Anodizado Cromo
Otros Colores Disponibles DE ITALIA

COLORS	ITEM NUMBER	PCS PER BOX	BOX DIMENSION mm W x D x H	BOX DIMENSION inch W x D x H	BOX WEIGHT KG	BOX WEIGHT LB	STOCK IN AMERICA MSRP PRICING USD EACH	BOX
50S	UGG800601-50S	10	150 x 100 x 90	5 7/8" x 3 7/8" x 3 1/2"	0.25	0.55	24.482	244.820
S2I	UGG800601-S2I	10	150 x 100 x 90	5 7/8" x 3 7/8" x 3 1/2"	0.25	0.55	25.210	252.100
SB1	UGG800601-SB1	10	150 x 100 x 90	5 7/8" x 3 7/8" x 3 1/2"	0.25	0.55	30.166	301.660
V01	UGG800601-V01	10	150 x 100 x 90	5 7/8" x 3 7/8" x 3 1/2"	0.25	0.55	24.720	247.200
V12	UGG800601-V12	10	150 x 100 x 90	5 7/8" x 3 7/8" x 3 1/2"	0.25	0.55	25.210	252.100
							AVAILABLE FROM ITALY MSRP PRICING USD	
LU5	GG800601-LU5	<<<<< MINIMUM ORDER AND PACKAGING TO BE CONFIRMED >>>>>					24.613	

AG8006

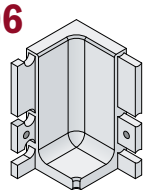

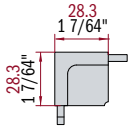

90° INTERNAL ALUMINUM CORNER FOR "GOLA" PROFILE 8006
50S Aluminum Clear Anodize
S2I Aluminum Titanium Anodize
SB1 Aluminum Stainless Anodize
V01 Aluminum White Semi-Gloss Powder Coated
V12 Aluminum Black Matt Powder Coated
LU5 Aluminum Chrome Anodize
Other Colors Available FROM ITALY

COIN INTERNE 90° EN ALUMINIUM POUR PROFILÉ "GOLA" 8006
50S Aluminium Clair Anodisé
S2I Aluminium Titanium Anodisé
SB1 Aluminium Inox Anodisé
V01 Aluminium Blanc Semi-Lustre Peint à Poudre
V12 Aluminium Noir Mat Peint à Poudre
LU5 Aluminium Chrome Anodisé
Autres Couleurs Disponibles DE L'ITALIE

ANGULO 90º INTERNO EN ALUMINIO PARA PERFIL "GOLA" 8006
50S Aluminio Anodizado Claro
S2I Aluminio Anodizado Titanio
SB1 Aluminio Anodizado Inox
V01 Aluminio Blanco Semi-Brillo Barnizado
V12 Aluminio Negro Mate Barnizado
LU5 Aluminio Anodizado Cromo
Otros Colores Disponibles DE ITALIA

COLORS	ITEM NUMBER	PCS PER BOX	BOX DIMENSION mm W x D x H	BOX DIMENSION inch W x D x H	BOX WEIGHT KG	BOX WEIGHT LB	STOCK IN AMERICA MSRP PRICING USD EACH	BOX
50S	UAG8006-50S	5	290 x 85 x 60	11 3/8" x 3 3/8" x 2 3/8"	0.45	0.99	32.270	161.350
S2I	UAG8006-S2I	5	290 x 85 x 60	11 3/8" x 3 3/8" x 2 3/8"	0.45	0.99	38.412	192.060
SB1	UAG8006-SB1	5	290 x 85 x 60	11 3/8" x 3 3/8" x 2 3/8"	0.45	0.99	38.040	190.200
V01	UAG8006-V01	5	290 x 85 x 60	11 3/8" x 3 3/8" x 2 3/8"	0.45	0.99	32.575	162.875
V12	UAG8006-V12	5	290 x 85 x 60	11 3/8" x 3 3/8" x 2 3/8"	0.45	0.99	33.203	166.015
							AVAILABLE FROM ITALY MSRP PRICING USD	
LU5	AG8006-LU5	<<<<< MINIMUM ORDER AND PACKAGING TO BE CONFIRMED >>>>>					27.877	

SG8006

90° EXTERNAL ALUMINUM CORNER FOR "GOLA" PROFILE 8006
50S Aluminum Clear Anodize
S2I Aluminum Titanium Anodize
SB1 Aluminum Stainless Anodize
V01 Aluminum White Semi-Gloss Powder Coated
V12 Aluminum Black Matt Powder Coated
LU5 Aluminum Chrome Anodize
Other Colors Available FROM ITALY

COIN EXTERNE 90° EN ALUMINIUM POUR PROFILÉ "GOLA" 8006
50S Aluminium Clair Anodisé
S2I Aluminium Titanium Anodisé
SB1 Aluminium Inox Anodisé
V01 Aluminium Blanc Semi-Lustre Peint à Poudre
V12 Aluminium Noir Mat Peint à Poudre
LU5 Aluminium Chrome Anodisé
Autres Couleurs Disponibles DE L'ITALIE

ANGULO EXTERNO 90º EN ALUMINIO PARA PERFIL"GOLA" 8006
50S Aluminio Anodizado Claro
S2I Aluminio Anodizado Titanio
SB1 Aluminio Anodizado Inox
V01 Aluminio Blanco Semi-Brillo Barnizado
V12 Aluminio Negro Mate Barnizado
LU5 Aluminio Anodizado Cromo
Otros Colores Disponibles DE ITALIA

COLORS	ITEM NUMBER	PCS PER BOX	BOX DIMENSION mm W x D x H	BOX DIMENSION inch W x D x H	BOX WEIGHT KG	BOX WEIGHT LB	STOCK IN AMERICA MSRP PRICING USD EACH	BOX
50S	USG8006-50S	5	290 x 85 x 60	11 3/8" x 3 3/8" x 2 3/8"	0.20	0.44	36.689	183.445
S2I	USG8006-S2I	5	290 x 85 x 60	11 3/8" x 3 3/8" x 2 3/8"	0.20	0.44	43.461	217.305
SB1	USG8006-SB1	5	290 x 85 x 60	11 3/8" x 3 3/8" x 2 3/8"	0.20	0.44	43.038	215.190
V01	USG8006-V01	5	290 x 85 x 60	11 3/8" x 3 3/8" x 2 3/8"	0.20	0.44	37.039	185.195
V12	USG8006-V12	5	290 x 85 x 60	11 3/8" x 3 3/8" x 2 3/8"	0.20	0.44	37.760	188.800
							AVAILABLE FROM ITALY MSRP PRICING USD	
LU5	SG8006-LU5		<<<<< MINIMUM ORDER AND PACKAGING TO BE CONFIRMED >>>>>				34.458	

CF8006TP

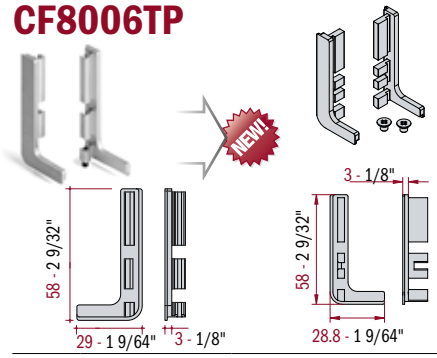

OPENED ALUMINUM END CAP FOR "GOLA" PROFILE 8006
50S Aluminum Clear Anodize
S2I Aluminum Titanium Anodize
SB1 Aluminum Stainless Anodize
V01 Aluminum White Semi-Gloss Powder Coated
V12 Aluminum Black Matt Powder Coated
LU5 Aluminum Chrome Anodize
Other Colors Available FROM ITALY

EMBOUT OUVERT EN ALUMINUM POUR PROFILÉ "GOLA" 8006
50S Aluminium Clair Anodisé
S2I Aluminium Titanium Anodisé
SB1 Aluminium Inox Anodisé
V01 Aluminium Blanc Semi-Lustre Peint à Poudre
V12 Aluminium Noir Mat Peint à Poudre
LU5 Aluminium Chrome Anodisé
Autres Couleurs Disponibles DE L'ITALIE

TAPAS ABIEETAS EN ALUMINIO PARA PERFIL "GOLA" 8006
50S Aluminio Anodizado Claro
S2I Aluminio Anodizado Titanio
SB1 Aluminio Anodizado Inox
V01 Aluminio Blanco Semi-Brillo Barnizado
V12 Aluminio Negro Mate Barnizado
LU5 Aluminio Anodizado Cromo
Otros Colores Disponibles DE ITALIA

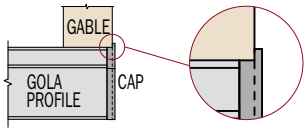

OVERLAPPING DESIGN

COLORS	ITEM NUMBER	PAIRS PER BOX	BOX DIMENSION mm W x D x H	BOX DIMENSION inch W x D x H	BOX WEIGHT KG	BOX WEIGHT LB	STOCK IN AMERICA MSRP PRICING USD PAIR	BOX
50S	UCF8006TP50S	5	145 x 95 x 85	5 3/4" x 3 3/4" x 3 3/8"	0.15	0.33	32.126	160.630
S2I	UCF8006TPS2I	5	145 x 95 x 85	5 3/4" x 3 3/4" x 3 3/8"	0.15	0.33	45.937	229.685
SB1	UCF8006TPSB1	5	145 x 95 x 85	5 3/4" x 3 3/4" x 3 3/8"	0.15	0.33	45.492	227.460
V01	UCF8006TPV01	5	145 x 95 x 85	5 3/4" x 3 3/4" x 3 3/8"	0.15	0.33	32.426	162.130
V12	UCF8006TPV12	5	145 x 95 x 85	5 3/4" x 3 3/4" x 3 3/8"	0.15	0.33	33.045	165.225
							AVAILABLE FROM ITALY MSRP PRICING USD	
LU5	CF8006TPLU5		<<<<< MINIMUM ORDER AND PACKAGING TO BE CONFIRMED >>>>>				34.999	

CF8006TP C

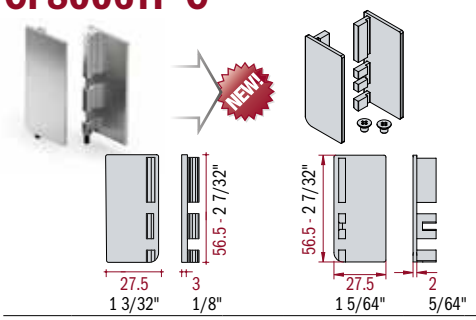

CLOSED ALUMINUM END CAP FOR "GOLA" PROFILE 8006
50S Aluminum Clear Anodize
S2I Aluminum Titanium Anodize
SB1 Aluminum Stainless Anodize
V01 Aluminum White Semi-Gloss Powder Coated
V12 Aluminum Black Matt Powder Coated
LU5 Aluminum Chrome Anodize
Other Colors Available FROM ITALY

EMBOUT FERMÉ EN ALUMINUM POUR PROFILÉ "GOLA" 8006
50S Aluminium Clair Anodisé
S2I Aluminium Titanium Anodisé
SB1 Aluminium Inox Anodisé
V01 Aluminium Blanc Semi-Lustre Peint à Poudre
V12 Aluminium Noir Mat Peint à Poudre
LU5 Aluminium Chrome Anodisé
Autres Couleurs Disponibles DE L'ITALIE

TAPAS CERRADAS EN ALUMINIO PARA PERFIL "GOLA" 8006
50S Aluminio Anodizado Claro
S2I Aluminio Anodizado Titanio
SB1 Aluminio Anodizado Inox
V01 Aluminio Blanco Semi-Brillo Barnizado
V12 Aluminio Negro Mate Barnizado
LU5 Aluminio Anodizado Cromo
Otros Colores Disponibles DE ITALIA

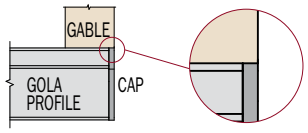

FLUSH DESIGN

COLORS	ITEM NUMBER	PAIRS PER BOX	BOX DIMENSION mm W x D x H	BOX DIMENSION inch W x D x H	BOX WEIGHT KG	BOX WEIGHT LB	STOCK IN AMERICA MSRP PRICING USD PAIR	BOX
50S	UCF8006TP50SC	5	145 x 95 x 85	5 3/4" x 3 3/4" x 3 3/8"	0.20	0.44	16.645	83.225
S2I	UCF8006TPS2IC	5	145 x 95 x 85	5 3/4" x 3 3/4" x 3 3/8"	0.20	0.44	18.195	90.975
SB1	UCF8006TPSB1C	5	145 x 95 x 85	5 3/4" x 3 3/4" x 3 3/8"	0.20	0.44	18.035	90.175
V01	UCF8006TPV01C	5	145 x 95 x 85	5 3/4" x 3 3/4" x 3 3/8"	0.20	0.44	16.787	83.935
V12	UCF8006TPV12C	5	145 x 95 x 85	5 3/4" x 3 3/4" x 3 3/8"	0.20	0.44	17.080	85.400
							AVAILABLE FROM ITALY MSRP PRICING USD	
LU5	CF8006TPLU5C		<<<<< MINIMUM ORDER AND PACKAGING TO BE CONFIRMED >>>>>				12.939	

NEW! NEW DESIGN WILL REPLACE CURRENT DESIGN WHEN CURRENT DESIGN INVENTORY IS OVER

KCSP0158

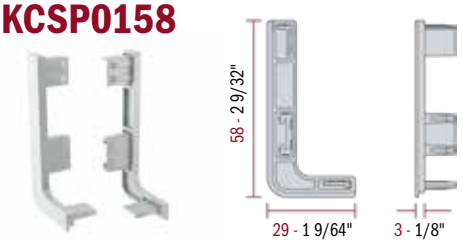

OPENED PLASTIC END CAP FOR "GOLA" PROFILE 8006
13 = Color Match for 50S
32 = Color Match for S2I & SB1
02 = Color Match for V01
06 = Color Match for V12
31 = Color Match for LU5

EMBOUT OUVERT EN PLASTIQUE POUR PROFILÉ "GOLA" 8006
13 = Couleur Correspondante pour 50S
32 = Couleur Correspondante pour S2I & SB1
02 = Couleur Correspondante pour V01
06 = Couleur Correspondante pour V12
31 = Couleur Correspondante pour LU5

TAPAS ABIERTAS EN PLASTICO PARA PERFIL "GOLA" 8006
13 = Ajuste de Color 50S Anodizado Claro
32 = Ajuste de Color S2I Anodizado Titanio, SB1 Anodizado Inox
02 = Ajuste de Color V01 Blanco Semi-Brillo Barnizado
06 = Ajuste de Color V12 Negro Mate Barnizado
31 = Ajuste de Color LU5 Cromo Anodizado

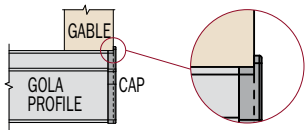

OVERLAPPING DESIGN

COLORS	ITEM NUMBER	PAIRS PER BOX	BOX DIMENSION mm W x D x H	BOX DIMENSION inch W x D x H	BOX WEIGHT KG	BOX WEIGHT LB	STOCK IN AMERICA MSRP PRICING USD PAIR	STOCK IN AMERICA MSRP PRICING USD BOX
13	UKCSP0158-13	25	145 x 95 x 85	5 3/4" x 3 3/4" x 3 3/8"	0.35	0.77	3.851	96.275
32	UKCSP0158-32	25	145 x 95 x 85	5 3/4" x 3 3/4" x 3 3/8"	0.35	0.77	7.897	197.425
02	UKCSP0158-02	25	145 x 95 x 85	5 3/4" x 3 3/4" x 3 3/8"	0.35	0.77	3.851	96.275
06	UKCSP0158-06	25	145 x 95 x 85	5 3/4" x 3 3/4" x 3 3/8"	0.35	0.77	3.851	96.275
							AVAILABLE FROM ITALY MSRP PRICING USD	
31	TGCSP0158-31	<<<<< MINIMUM ORDER AND PACKAGING TO BE CONFIRMED >>>>>					6.367	

KCSP0159

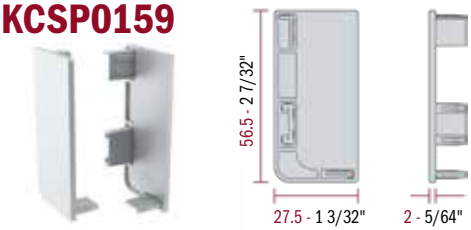

CLOSED PLASTIC END CAP FOR "GOLA" PROFILE 8006
13 = Color Match for 50S
32 = Color Match for S2I & SB1
02 = Color Match for V01
06 = Color Match for V12
31 = Color Match for LU5

EMBOUT FERMÉ EN PLASTIQUE POUR PROFILÉ "GOLA" 8006
13 = Couleur Correspondante pour 50S
32 = Couleur Correspondante pour S2I & SB1
02 = Couleur Correspondante pour V01
06 = Couleur Correspondante pour V12
31 = Couleur Correspondante pour LU5

TAPAS CERRADAS EN PLASTICO PARA PERFIL "GOLA" 8006
13 = Ajuste de Color 50S Anodizado Claro
32 = Ajuste de Color S2I Anodizado Titanio, SB1 Anodizado Inox
02 = Ajuste de Color V01 Blanco Semi-Brillo Barnizado
06 = Ajuste de Color V12 Negro Mate Barnizado
31 = Ajuste de Color LU5 Cromo Anodizado

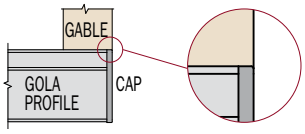

FLUSH DESIGN

COLORS	ITEM NUMBER	PAIRS PER BOX	BOX DIMENSION mm W x D x H	BOX DIMENSION inch W x D x H	BOX WEIGHT KG	BOX WEIGHT LB	STOCK IN AMERICA MSRP PRICING USD PAIR	STOCK IN AMERICA MSRP PRICING USD BOX
13	UKCSP0159-13	25	145 x 95 x 85	5 3/4" x 3 3/4" x 3 3/8"	0.35	0.77	4.765	119.125
32	UKCSP0159-32	25	145 x 95 x 85	5 3/4" x 3 3/4" x 3 3/8"	0.35	0.77	9.723	243.075
02	UKCSP0159-02	25	145 x 95 x 85	5 3/4" x 3 3/4" x 3 3/8"	0.35	0.77	4.765	119.125
06	UKCSP0159-06	25	145 x 95 x 85	5 3/4" x 3 3/4" x 3 3/8"	0.35	0.77	4.765	119.125
							AVAILABLE FROM ITALY MSRP PRICING USD	
31	FGCSP0159-31	<<<<< MINIMUM ORDER AND PACKAGING TO BE CONFIRMED >>>>>					5.545	

SU116

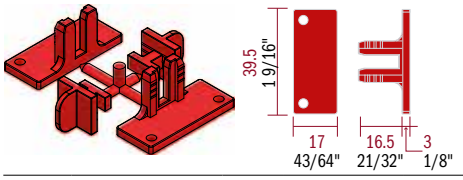

SUPPORT FOR "GOLA" PROFILE 8006 - 8007 - 8021 - 8022 (SCREWED)

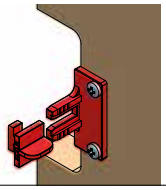

SUPPORT POUR PROFILÉ "GOLA" 8006 - 8007 - 8021 - 8022 (VISSÉ)

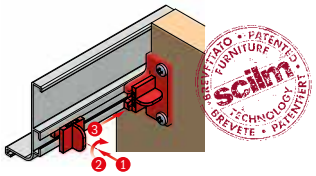

SOPORTES PARA GOLA 8006 - 8007 - 8021 - 8022 (PARA ATORNILLAR)

ITEM NUMBER	PAIRS PER BOX	BOX DIMENSION mm W x D x H	BOX DIMENSION inch W x D x H	BOX WEIGHT KG	BOX WEIGHT LB	STOCK IN AMERICA MSRP PRICING USD PAIR	STOCK IN AMERICA MSRP PRICING USD BOX
USU116DS59	100	470 x 170 x 125	18 1/2" x 6 3/4" x 4 7/8"	1.50	3.31	1.002	100.200

SU136

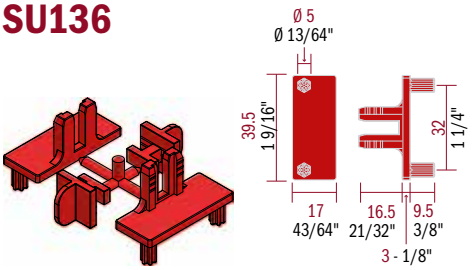

SUPPORT FOR "GOLA" PROFILE 8006 - 8007 - 8021 - 8022 (DOWELED)

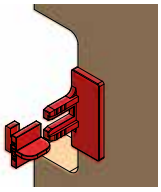

SUPPORT POUR PROFILÉ "GOLA" 8006 - 8007 - 8021 - 8022 (CHEVILLÉ)

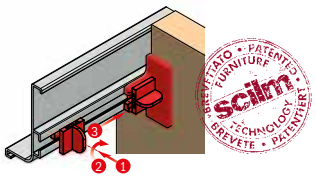

SOPORTES PARA GOLA 8006 - 8007 - 8021 - 8022 (PARA TETONES)

ITEM NUMBER	PAIRS PER BOX	BOX DIMENSION mm W x D x H	BOX DIMENSION inch W x D x H	BOX WEIGHT KG	BOX WEIGHT LB	STOCK IN AMERICA MSRP PRICING USD PAIR	STOCK IN AMERICA MSRP PRICING USD BOX
USU136DS59	100	470 x 150 x 125	18 1/2" x 5 7/8" x 4 7/8"	1.50	3.31	1.002	100.200

8007

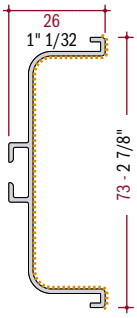

"GOLA" HORIZONTAL ALUMINUM SPACER CHANNEL PROFILE FOR BASE CABINET
50S Aluminum Clear Anodize
S2I Aluminum Titanium Anodize
SB1 Aluminum Stainless Anodize
V01 Aluminum White Semi-Gloss Powder Coated
V12 Aluminum Black Matt Powder Coated
LU5 Aluminum Chrome Anodize
Other Colors and Lengths Available FROM ITALY

"GOLA" PROFILÉ D'ESPACEMENT HORIZONTALE EN ALUMINIUM POUR ARMOIRE DU BAS
50S Aluminium Clair Anodisé
S2I Aluminium Titanium Anodisé
SB1 Aluminium Inox Anodisé
V01 Aluminium Blanc Semi-Lustre Peint à Poudre
V12 Aluminium Noir Mat Peint à Poudre
LU5 Aluminium Chrome Anodisé
Autres Couleurs et Longueurs Disponibles DE L'ITALIE

PERFIL GOLA HORIZONTAL EN ALUMINIO PARA MUEBLE BAJO
50S Aluminio Anodizado Claro
S2I Aluminio Anodizado Titanio
SB1 Aluminio Anodizado Inox
V01 Aluminio Blanco Semi-Brillo Barnizado
V12 Aluminio Negro Mate Barnizado
LU5 Aluminio Anodizado Cromo
Otros Colores y Dimensiones DE ITALIA

COLORS	ITEM NUMBER	LENGTH mm	LENGTH inch	PCS PER BOX	BOX DIMENSION mm W x D x H	BOX DIMENSION inch W x D x H	BOX WEIGHT KG	BOX WEIGHT LB	STOCK IN AMERICA MSRP PRICING USD METER	FOOT	EACH	BOX
50S	U800750SL27	2670	105 1/8"	5	2740 x 125 x 95	107 7/8" x 4 7/8" x 3 3/4"	7.15	15.76	18.576	5.662	49.598	247.990
50S	U800750SL41	4100	161 7/16"	5	4250 x 125 x 95	167 3/8" x 4 7/8" x 3 3/4"	10.35	22.82	16.393	4.997	67.211	336.057
S2I	U8007S2IL27	2670	105 1/8"	5	2740 x 125 x 95	107 7/8" x 4 7/8" x 3 3/4"	7.15	15.76	25.218	7.686	67.332	336.660
S2I	U8007S2IL41	4100	161 7/16"	5	4250 x 125 x 95	167 3/8" x 4 7/8" x 3 3/4"	10.35	22.82	23.518	7.168	96.424	482.119
SB1	U8007SB1L27	2670	105 1/8"	5	2740 x 125 x 95	107 7/8" x 4 7/8" x 3 3/4"	7.15	15.76	25.454	7.758	67.962	339.811
SB1	U8007SB1L41	4100	161 7/16"	5	4250 x 125 x 95	167 3/8" x 4 7/8" x 3 3/4"	10.35	22.82	24.462	7.456	100.294	501.471
V01	U8007V01L27	2670	105 1/8"	5	2740 x 125 x 95	107 7/8" x 4 7/8" x 3 3/4"	7.15	15.76	18.756	5.717	50.079	250.393
V01	U8007V01L41	4100	161 7/16"	5	4250 x 125 x 95	167 3/8" x 4 7/8" x 3 3/4"	10.35	22.82	17.026	5.190	69.807	349.033
V12	U8007V12L27	2670	105 1/8"	5	2740 x 125 x 95	107 7/8" x 4 7/8" x 3 3/4"	7.15	15.76	19.129	5.831	51.074	255.372
V12	U8007V12L41	4100	161 7/16"	5	4250 x 125 x 95	167 3/8" x 4 7/8" x 3 3/4"	10.35	22.82	17.368	5.294	71.209	356.044
									AVAILABLE FROM ITALY MSRP PRICING USD			
LU5	8007LU5L41	4100	161 7/16"	<<<<< MINIMUM ORDER AND PACKAGING TO BE CONFIRMED >>>>>					16.735	5.101	68.614	

AG8007

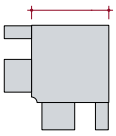

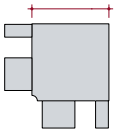

90° INTERNAL ALUMINUM CORNER FOR "GOLA" PROFILE 8007
50S Aluminum Clear Anodize
S2I Aluminum Titanium Anodize
SB1 Aluminum Stainless Anodize
V01 Aluminum White Semi-Gloss Powder Coated
V12 Aluminum Black Matt Powder Coated
LU5 Aluminum Chrome Anodize
Other Colors Available FROM ITALY

COIN INTERNE 90° EN ALUMINIUM POUR PROFILÉ "GOLA" 8007
50S Aluminium Clair Anodisé
S2I Aluminium Titanium Anodisé
SB1 Aluminium Inox Anodisé
V01 Aluminium Blanc Semi-Lustre Peint à Poudre
V12 Aluminium Noir Mat Peint à Poudre
LU5 Aluminium Chrome Anodisé
Autres Couleurs Disponibles DE L'ITALIE

ANGULO INTERNO 90° EN ALUMINIO PATA PERFIL GOLA 8007
50S Aluminio Anodizado Claro
S2I Aluminio Anodizado Titanio
SB1 Aluminio Anodizado Inox
V01 Aluminio Blanco Semi-Brillo Barnizado
V12 Aluminio Negro Mate Barnizado
LU5 Aluminio Anodizado Cromo
Otros Colores Disponibles DE ITALIA

COLORS	ITEM NUMBER	PCS PER BOX	BOX DIMENSION mm W x D x H	BOX DIMENSION inch W x D x H	BOX WEIGHT KG	BOX WEIGHT LB	STOCK IN AMERICA MSRP PRICING USD EACH	BOX
50S	UAG8007-50S	5	290 x 85 x 60	11 3/8" x 3 3/8" x 2 3/8"	0.55	1.21	59.941	299.705
S2I	UAG8007-S2I	5	290 x 85 x 60	11 3/8" x 3 3/8" x 2 3/8"	0.55	1.21	64.305	321.525
SB1	UAG8007-SB1	5	290 x 85 x 60	11 3/8" x 3 3/8" x 2 3/8"	0.55	1.21	63.661	318.305
V01	UAG8007-V01	5	290 x 85 x 60	11 3/8" x 3 3/8" x 2 3/8"	0.55	1.21	60.528	302.640
V12	UAG8007-V12	5	290 x 85 x 60	11 3/8" x 3 3/8" x 2 3/8"	0.55	1.21	61.739	308.695
							AVAILABLE FROM ITALY MSRP PRICING USD	
LU5	AG8007-LU5	<<<<< MINIMUM ORDER AND PACKAGING TO BE CONFIRMED >>>>>					51.652	

SG8007

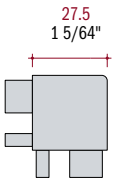

90° EXTERNAL ALUMINUM CORNER FOR "GOLA" PROFILE 8007
50S Aluminum Clear Anodize
S2I Aluminum Titanium Anodize
SB1 Aluminum Stainless Anodize
V01 Aluminum White Semi-Gloss Powder Coated
V12 Aluminum Black Matt Powder Coated
LU5 Aluminum Chrome Anodize
Other Colors Available FROM ITALY

COIN EXTERNE 90° EN ALUMINIUM POUR PROFILÉ "GOLA" 8007
50S Aluminium Clair Anodisé
S2I Aluminium Titanium Anodisé
SB1 Aluminium Inox Anodisé
V01 Aluminium Blanc Semi-Lustre Peint à Poudre
V12 Aluminium Noir Mat Peint à Poudre
LU5 Aluminium Chrome Anodisé
Autres Couleurs Disponibles DE L'ITALIE

ANGULO EXTERNO 90° EN ALUMINIO PARA PERFIL"GOLA" 8007
50S Aluminio Anodizado Claro
S2I Aluminio Anodizado Titanio
SB1 Aluminio Anodizado Inox
V01 Aluminio Blanco Semi-Brillo Barnizado
V12 Aluminio Negro Mate Barnizado
LU5 Aluminio Anodizado Cromo
Otros Colores Disponibles DE ITALIA

COLORS	ITEM NUMBER	PCS PER BOX	BOX DIMENSION mm W x D x H	BOX DIMENSION inch W x D x H	BOX WEIGHT KG	BOX WEIGHT LB	STOCK IN AMERICA MSRP PRICING USD EACH	BOX
50S	USG8007-50S	5	290 x 85 x 60	11 3/8" x 3 3/8" x 2 3/8"	0.30	0.66	67.262	336.310
S2I	USG8007-S2I	5	290 x 85 x 60	11 3/8" x 3 3/8" x 2 3/8"	0.30	0.66	74.574	372.870
SB1	USG8007-SB1	5	290 x 85 x 60	11 3/8" x 3 3/8" x 2 3/8"	0.30	0.66	73.830	369.150
V01	USG8007-V01	5	290 x 85 x 60	11 3/8" x 3 3/8" x 2 3/8"	0.30	0.66	67.924	339.620
V12	USG8007-V12	5	290 x 85 x 60	11 3/8" x 3 3/8" x 2 3/8"	0.30	0.66	69.289	346.445
							AVAILABLE FROM ITALY MSRP PRICING USD	
LU5	SG8007-LU5	<<<<< MINIMUM ORDER AND PACKAGING TO BE CONFIRMED >>>>>					62.760	

UGG8007

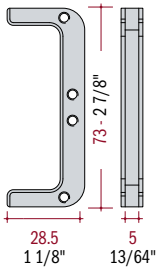

ALUMINUM LINEAR JUNCTION
FOR "GOLA" PROFILE 8007
50S Aluminum Clear Anodize
S2I Aluminum Titanium Anodize
SB1 Aluminum Stainless Anodize
V01 Aluminum White Semi-Gloss Powder Coated
V12 Aluminum Black Matt Powder Coated
LU5 Aluminum Chrome Anodize
Other Colors Available FROM ITALY

JONCTION LINÉAIRE EN ALUMINIUM
POUR PROFILÉ "GOLA" 8007
50S Aluminium Clair Anodisé
S2I Aluminium Titanium Anodisé
SB1 Aluminium Inox Anodisé
V01 Aluminium Blanc Semi-Lustre Peint à Poudre
V12 Aluminium Noir Mat Peint à Poudre
LU5 Aluminium Chrome Anodisé
Autres Couleurs Disponibles DE L'ITALIE

UNIÓN LINEAL EN ALUMINIO
PERFIL "GOLA" 8007
50S Aluminio Anodizado Claro
S2I Aluminio Anodizado Titanio
SB1 Aluminio Anodizado Inox
V01 Aluminio Blanco Semi-Brillo Barnizado
V12 Aluminio Negro Mate Barnizado
LU5 Aluminio Anodizado Cromo
Otros Colores Disponibles DE ITALIA

COLORS	ITEM NUMBER	EACH PER BOX	BOX DIMENSION mm W x D x H	BOX DIMENSION inch W x D x H	BOX WEIGHT KG	BOX WEIGHT LB	STOCK IN AMERICA MSRP PRICING USD EACH	
50S	UGG800701-50S	10	150 x 100 x 90	5 7/8" x 3 7/8" x 3 1/2"	0.25	0.55	34.257	342.570
S2I	UGG800701-S2I	10	150 x 100 x 90	5 7/8" x 3 7/8" x 3 1/2"	0.25	0.55	40.473	404.730
SB1	UGG800701-SB1	10	150 x 100 x 90	5 7/8" x 3 7/8" x 3 1/2"	0.25	0.55	40.068	400.680
V01	UGG800701-V01	10	150 x 100 x 90	5 7/8" x 3 7/8" x 3 1/2"	0.25	0.55	34.594	345.940
V12	UGG800701-V12	10	150 x 100 x 90	5 7/8" x 3 7/8" x 3 1/2"	0.25	0.55	35.290	352.900
							AVAILABLE FROM ITALY MSRP PRICING USD	
LU5	GG800701-LU5	<<<<< MINIMUM ORDER AND PACKAGING TO BE CONFIRMED >>>>>					33.978	

CF8007TP

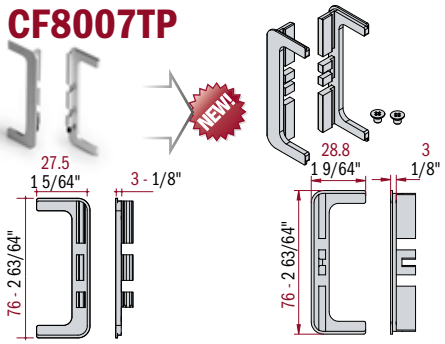

OPENED ALUMINUM END CAP FOR "GOLA" PROFILE 8007
50S Aluminum Clear Anodize
S2I Aluminum Titanium Anodize
SB1 Aluminum Stainless Anodize
V01 Aluminum White Semi-Gloss Powder Coated
V12 Aluminum Black Matt Powder Coated
LU5 Aluminum Chrome Anodize
Other Colors Available FROM ITALY

EMBOUT OUVERT EN ALUMINUM POUR PROFILÉ "GOLA" 8007
50S Aluminium Clair Anodisé
S2I Aluminium Titanium Anodisé
SB1 Aluminium Inox Anodisé
V01 Aluminium Blanc Semi-Lustre Peint à Poudre
V12 Aluminium Noir Mat Peint à Poudre
LU5 Aluminium Chrome Anodisé
Autres Couleurs Disponibles DE L'ITALIE

TAPAS ABIEETAS EN ALUMINIO PARA PERFIL "GOLA" 8007
50S Aluminio Anodizado Claro
S2I Aluminio Anodizado Titanio
SB1 Aluminio Anodizado Inox
V01 Aluminio Blanco Semi-Brillo Barnizado
V12 Aluminio Negro Mate Barnizado
LU5 Aluminio Anodizado Cromo
Otros Colores Disponibles DE ITALIA

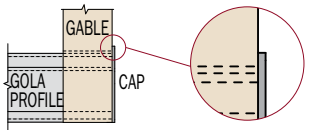

OVERLAPPING DESIGN

COLORS	ITEM NUMBER	PAIRS PER BOX	BOX DIMENSION mm W x D x H	BOX DIMENSION inch W x D x H	BOX WEIGHT KG	BOX WEIGHT LB	STOCK IN AMERICA MSRP PRICING USD PAIR	BOX
50S	UCF8007TP50S	5	145 x 95 x 85	5 3/4" x 3 3/4" x 3 3/8"	0.25	0.55	31.201	156.005
S2I	UCF8007TPS2I	5	145 x 95 x 85	5 3/4" x 3 3/4" x 3 3/8"	0.25	0.55	46.191	230.955
SB1	UCF8007TPSB1	5	145 x 95 x 85	5 3/4" x 3 3/4" x 3 3/8"	0.25	0.55	45.743	228.715
V01	UCF8007TPV01	5	145 x 95 x 85	5 3/4" x 3 3/4" x 3 3/8"	0.25	0.55	31.491	157.455
V12	UCF8007TPV12	5	145 x 95 x 85	5 3/4" x 3 3/4" x 3 3/8"	0.25	0.55	32.091	160.455
							AVAILABLE FROM ITALY MSRP PRICING USD	
LU5	CF8007TPLU5	<<<<< MINIMUM ORDER AND PACKAGING TO BE CONFIRMED >>>>>					34.689	

CF8007TPI

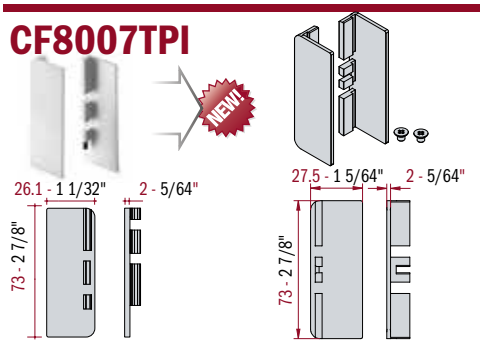

CLOSED ALUMINUM END CAP FOR "GOLA" PROFILE 8007
50S Aluminum Clear Anodize
S2I Aluminum Titanium Anodize
SB1 Aluminum Stainless Anodize
V01 Aluminum White Semi-Gloss Powder Coated
V12 Aluminum Black Matt Powder Coated
LU5 Aluminum Chrome Anodize
Other Colors Available FROM ITALY

EMBOUT FERMÉ EN ALUMINUM POUR PROFILÉ "GOLA" 8007
50S Aluminium Clair Anodisé
S2I Aluminium Titanium Anodisé
SB1 Aluminium Inox Anodisé
V01 Aluminium Blanc Semi-Lustre Peint à Poudre
V12 Aluminium Noir Mat Peint à Poudre
LU5 Aluminium Chrome Anodisé
Autres Couleurs Disponibles DE L'ITALIE

TAPAS CERRADAS EN ALUMINIO PARA PERFIL "GOLA" 8007
50S Aluminio Anodizado Claro
S2I Aluminio Anodizado Titanio
SB1 Aluminio Anodizado Inox
V01 Aluminio Blanco Semi-Brillo Barnizado
V12 Aluminio Negro Mate Barnizado
LU5 Aluminio Anodizado Cromo
Otros Colores Disponibles DE ITALIA

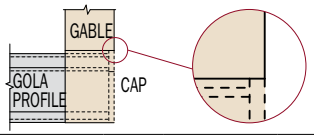

FLUSH DESIGN

COLORS	ITEM NUMBER	PAIRS PER BOX	BOX DIMENSION mm W x D x H	BOX DIMENSION inch W x D x H	BOX WEIGHT KG	BOX WEIGHT LB	STOCK IN AMERICA MSRP PRICING USD PAIR	BOX
50S	UCF8007TPI50S	5	145 x 95 x 85	5 3/4" x 3 3/4" x 3 3/8"	0.25	0.55	17.053	85.265
S2I	UCF8007TPIS2I	5	145 x 95 x 85	5 3/4" x 3 3/4" x 3 3/8"	0.25	0.55	18.988	94.940
SB1	UCF8007TPISB1	5	145 x 95 x 85	5 3/4" x 3 3/4" x 3 3/8"	0.25	0.55	18.820	94.100
V01	UCF8007TPIV01	5	145 x 95 x 85	5 3/4" x 3 3/4" x 3 3/8"	0.25	0.55	17.199	85.995
V12	UCF8007TPIV12	5	145 x 95 x 85	5 3/4" x 3 3/4" x 3 3/8"	0.25	0.55	17.501	87.505
							AVAILABLE FROM ITALY MSRP PRICING USD	
LU5	CF8007TPILU5C	<<<<< MINIMUM ORDER AND PACKAGING TO BE CONFIRMED >>>>>					12.899	

KCSP0160

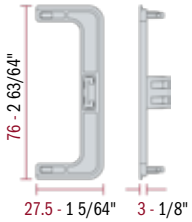

OPENED PLASTIC END CAP FOR "GOLA" PROFILE 8007
13 = Color Match for 50S
32 = Color Match for S2I & SB1
02 = Color Match for V01
06 = Color Match for V12
31 = Color Match for LU5

EMBOUT OUVERT EN PLASTIQUE POUR PROFILÉ "GOLA" 8007
13 = Couleur Correspondante pour 50S
32 = Couleur Correspondante pour S2I & SB1
02 = Couleur Correspondante pour V01
06 = Couleur Correspondante pour V12
31 = Couleur Correspondante pour LU5

TAPAS ABIERTAS EN PLASTICO PARA PERFIL "GOLA" 8007
13 = Ajuste de Color 50S Anodizado Claro
32 = Ajuste de Color S2I Anodizado Titanio, SB1 Anodizado Inox
02 = Ajuste de Color V01 Blanco Semi-Brillo Barnizado
06 = Ajuste de Color V12 Negro Mate Barnizado
31 = Ajuste de Color LU5 Cromo Anodizado

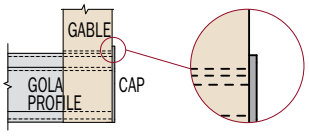

OVERLAPPING DESIGN

COLORS	ITEM NUMBER	PAIRS PER BOX	BOX DIMENSION mm W x D x H	BOX DIMENSION inch W x D x H	BOX WEIGHT KG	BOX WEIGHT LB	STOCK IN AMERICA MSRP PRICING USD PAIR	STOCK IN AMERICA MSRP PRICING USD BOX
13	UKCSP0160-13	25	145 x 95 x 85	5 3/4" x 3 3/4" x 3 3/8"	0.35	0.77	3.851	96.275
32	UKCSP0160-32	25	145 x 95 x 85	5 3/4" x 3 3/4" x 3 3/8"	0.35	0.77	7.897	197.425
02	UKCSP0160-02	25	145 x 95 x 85	5 3/4" x 3 3/4" x 3 3/8"	0.35	0.77	3.851	96.275
06	UKCSP0160-06	25	145 x 95 x 85	5 3/4" x 3 3/4" x 3 3/8"	0.35	0.77	3.851	96.275
							AVAILABLE FROM ITALY MSRP PRICING USD	
31	TGCSP0160-31	<<<<< MINIMUM ORDER AND PACKAGING TO BE CONFIRMED >>>>>					6.032	

KCSP0161

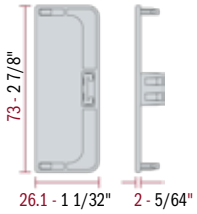

CLOSED PLASTIC END CAP FOR "GOLA" PROFILE 8007
13 = Color Match for 50S
32 = Color Match for S2I & SB1
02 = Color Match for V01
06 = Color Match for V12
31 = Color Match for LU5

EMBOUT FERMÉ EN PLASTIQUE POUR PROFILÉ "GOLA" 8007
13 = Couleur Correspondante pour 50S
32 = Couleur Correspondante pour S2I & SB1
02 = Couleur Correspondante pour V01
06 = Couleur Correspondante pour V12
31 = Couleur Correspondante pour LU5

TAPAS CERRADAS EN PLASTICO PARA PERFIL "GOLA" 8007
13 = Ajuste de Color 50S Anodizado Claro
32 = Ajuste de Color S2I Anodizado Titanio, SB1 Anodizado Inox
02 = Ajuste de Color V01 Blanco Semi-Brillo Barnizado
06 = Ajuste de Color V12 Negro Mate Barnizado
31 = Ajuste de Color LU5 Cromo Anodizado

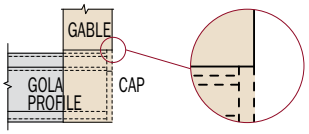

FLUSH DESIGN

COLORS	ITEM NUMBER	PAIRS PER BOX	BOX DIMENSION mm W x D x H	BOX DIMENSION inch W x D x H	BOX WEIGHT KG	BOX WEIGHT LB	STOCK IN AMERICA MSRP PRICING USD PAIR	STOCK IN AMERICA MSRP PRICING USD BOX
13	UKCSP0161-13	25	145 x 95 x 85	5 3/4" x 3 3/4" x 3 3/8"	0.35	0.77	4.765	119.125
32	UKCSP0161-32	25	145 x 95 x 85	5 3/4" x 3 3/4" x 3 3/8"	0.35	0.77	9.723	243.075
02	UKCSP0161-02	25	145 x 95 x 85	5 3/4" x 3 3/4" x 3 3/8"	0.35	0.77	4.765	119.125
06	UKCSP0161-06	25	145 x 95 x 85	5 3/4" x 3 3/4" x 3 3/8"	0.35	0.77	4.765	119.125
							AVAILABLE FROM ITALY MSRP PRICING USD	
31	FGCSP0161-31	<<<<< MINIMUM ORDER AND PACKAGING TO BE CONFIRMED >>>>>					6.341	

SU116

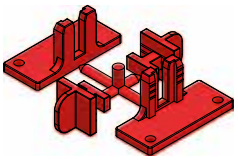

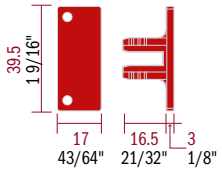

SUPPORT FOR "GOLA" PROFILE 8006 - 8007 - 8021 - 8022 (SCREWED)

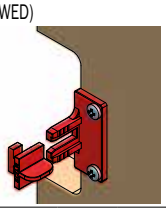

SUPPORT POUR PROFILÉ "GOLA" 8006 - 8007 - 8021 - 8022 (VISSÉ)

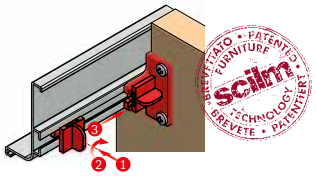

SOPORTES PARA GOLA 8006 - 8007 - 8021 - 8022 (PARA ATORNILLAR)

ITEM NUMBER	PAIRS PER BOX	BOX DIMENSION mm W x D x H	BOX DIMENSION inch W x D x H	BOX WEIGHT KG	BOX WEIGHT LB	STOCK IN AMERICA MSRP PRICING USD PAIR	STOCK IN AMERICA MSRP PRICING USD BOX
USU116DS59	100	470 x 170 x 125	18 1/2" x 6 3/4" x 4 7/8"	1.50	3.31	1.002	100.200

SU136

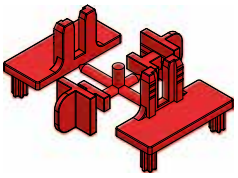

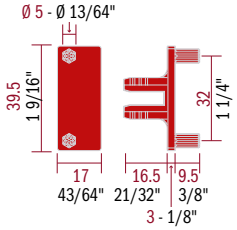

SUPPORT FOR "GOLA" PROFILE 8006 - 8007 - 8021 - 8022 (DOWELED)

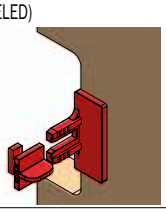

SUPPORT POUR PROFILÉ "GOLA" 8006 - 8007 - 8021 - 8022 (CHEVILLÉ)

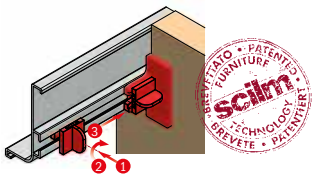

SOPORTES PARA GOLA 8006 - 8007 - 8021 - 8022 (PARA TETONES)

ITEM NUMBER	PAIRS PER BOX	BOX DIMENSION mm W x D x H	BOX DIMENSION inch W x D x H	BOX WEIGHT KG	BOX WEIGHT LB	STOCK IN AMERICA MSRP PRICING USD PAIR	STOCK IN AMERICA MSRP PRICING USD BOX
USU136DS59	100	470 x 150 x 125	18 1/2" x 5 7/8" x 4 7/8"	1.50	3.31	1.002	100.200

12869

RECESSED ZAMAK HANDLE
Recessed zamak handle.
25I color match for 50S
16M color match for S2I & SB1
620 color match for V01
20M color match for V12
260 color match for LU5

POIGNÉE A ENCASTER EN ZAMAK
Poignée a encastré en zamak.
25I couleur correspondante pour 50S
16M couleur correspondante pour S2I & SB1
620 couleur correspondante pour V01
20M couleur correspondante pour V12
260 couleur correspondante pour LU5

TTIRADOR DE ENCASTRAR EN ZAMAK
Tirador de encastrar en zamak.
25I ajuste de color 50S
16M ajuste de color S2I & SB1
620 ajuste de color V01
20M ajuste de color V12
260 ajuste de color LU5

COLORS	ITEM NUMBER	PCS PER BOX	BOX DIMENSION mm W x D x H	BOX DIMENSION inch W x D x H	BOX WEIGHT KG	BOX WEIGHT LB	STOCK IN AMERICA MSRP PRICING USD EACH	BOX
25I	U12869S.25I	25	310 x 170 x 130	12 1/4" x 6 3/4" x 5 1/8"	1.70	3.75	15.003	375.075
16M	U12869S.16M	25	310 x 170 x 130	12 1/4" x 6 3/4" x 5 1/8"	1.70	3.75	16.733	418.325
620	U12869S.620	25	310 x 170 x 130	12 1/4" x 6 3/4" x 5 1/8"	1.70	3.75	16.733	418.325
20M	U12869S.20M	25	310 x 170 x 130	12 1/4" x 6 3/4" x 5 1/8"	1.70	3.75	16.733	418.325
							AVAILABLE FROM ITALY MSRP PRICING USD	
260	9999C1264		<<<<< MINIMUM ORDER AND PACKAGING TO BE CONFIRMED >>>>>				14.840	

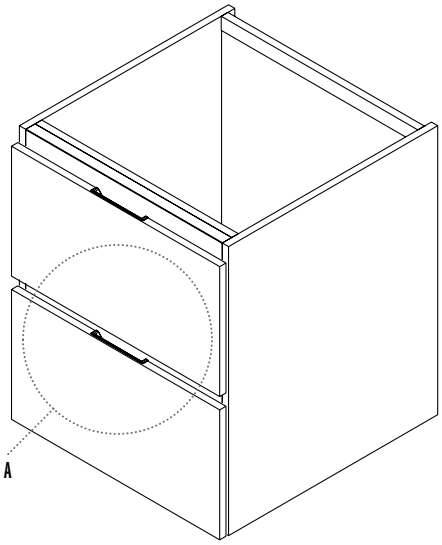

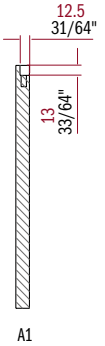

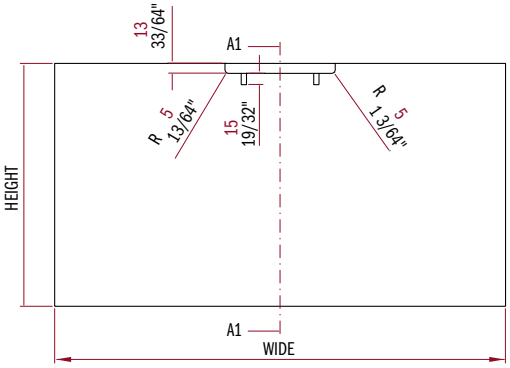

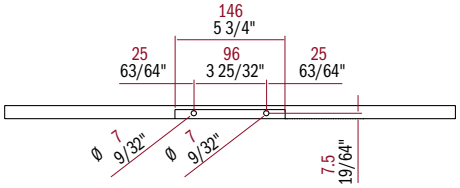

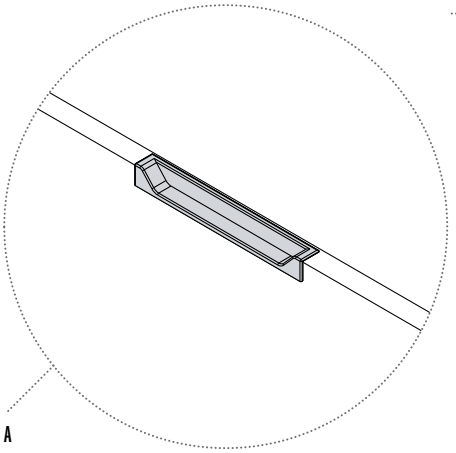

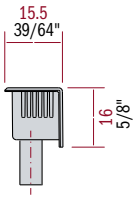

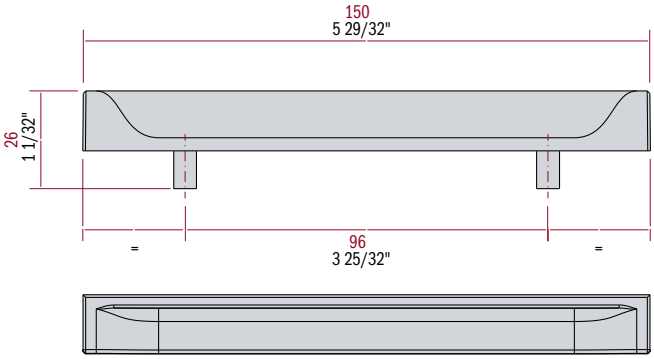

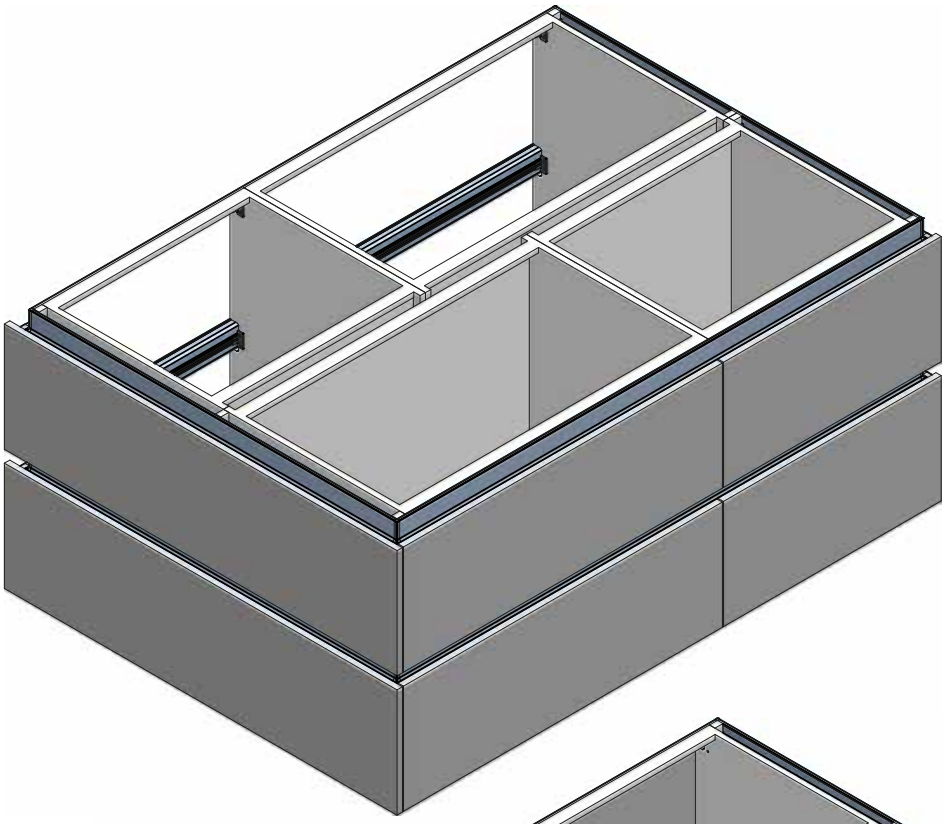

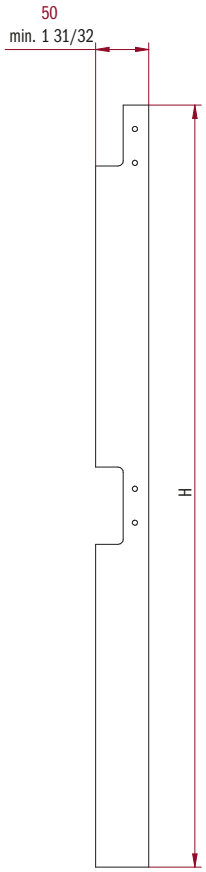

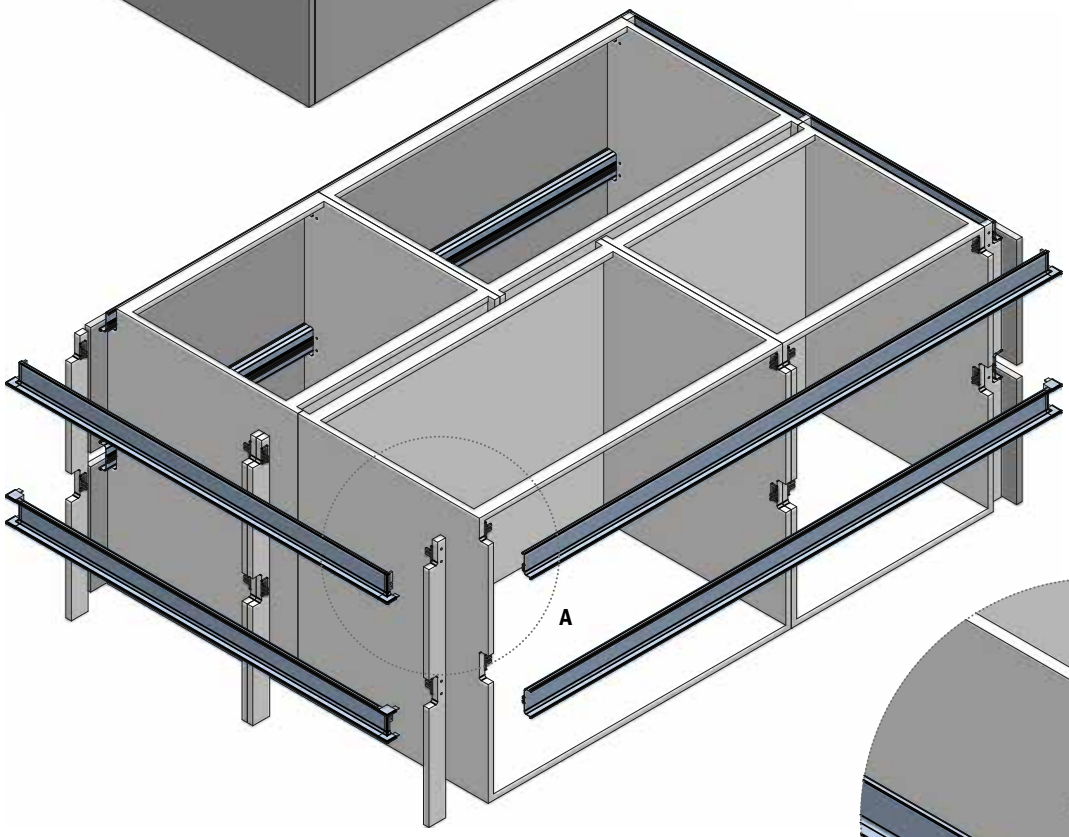

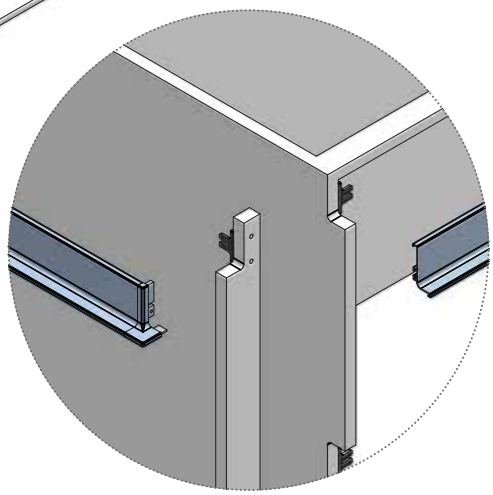

DETAIL A

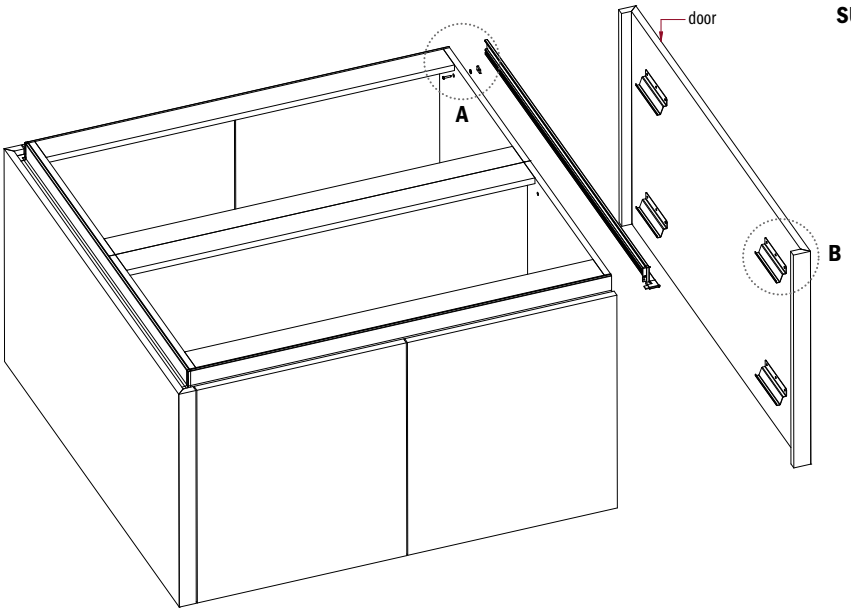

SUGGESTED GOLA FIXING METHODS

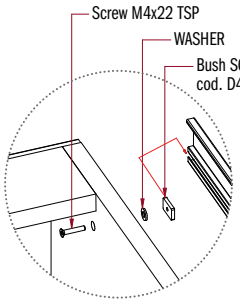

DETAIL A

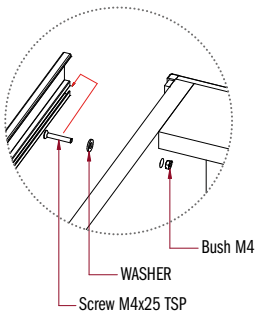

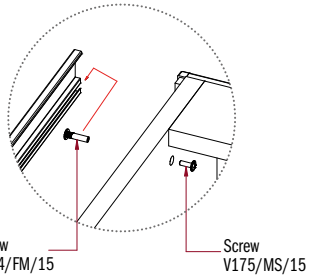

N. 4

Fastening of
Gola 8006 section
by means of silicon
or appropriate glue.

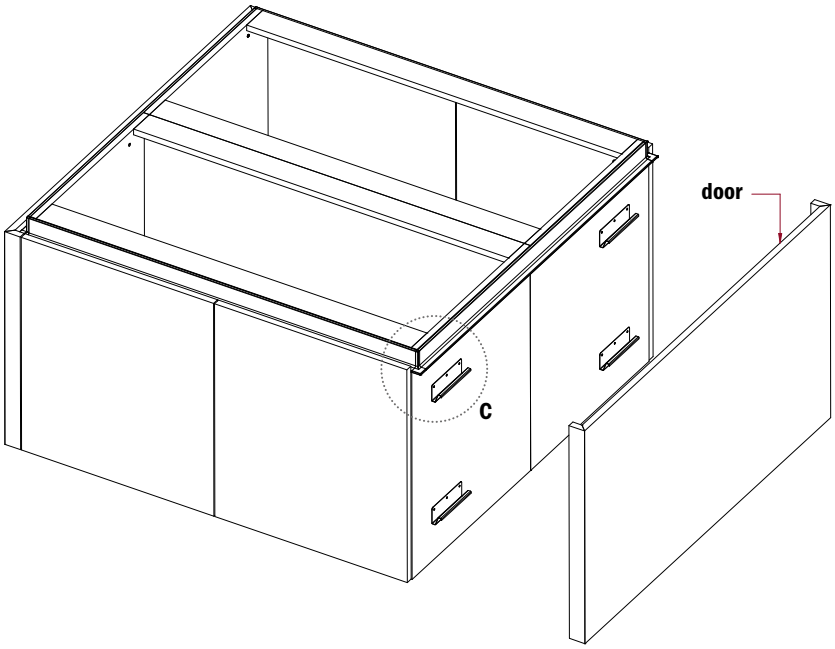

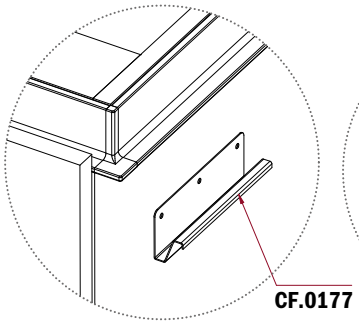

DETAIL C

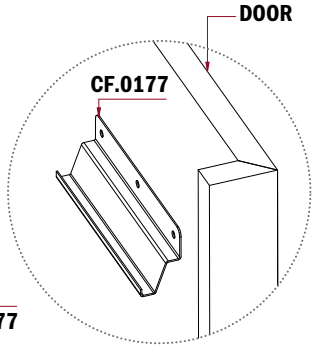

DETAIL B

CF.0177

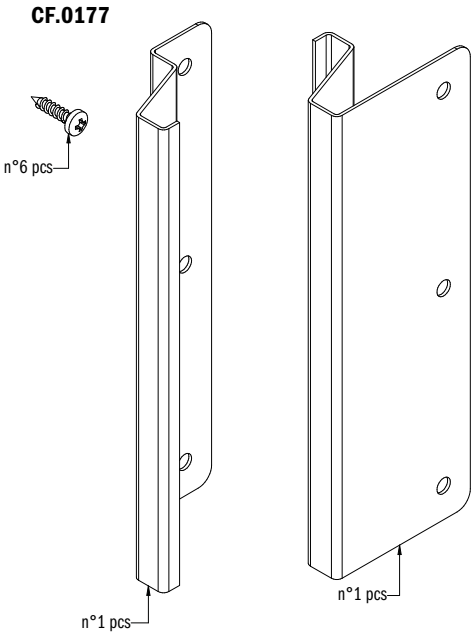

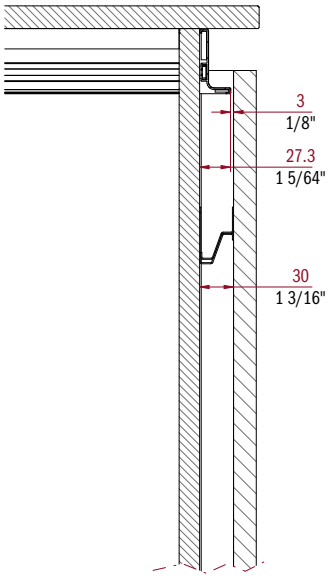

"GOLA" PROFILE

PROFILÉ "GOLA"

PERFIL "GOLA"

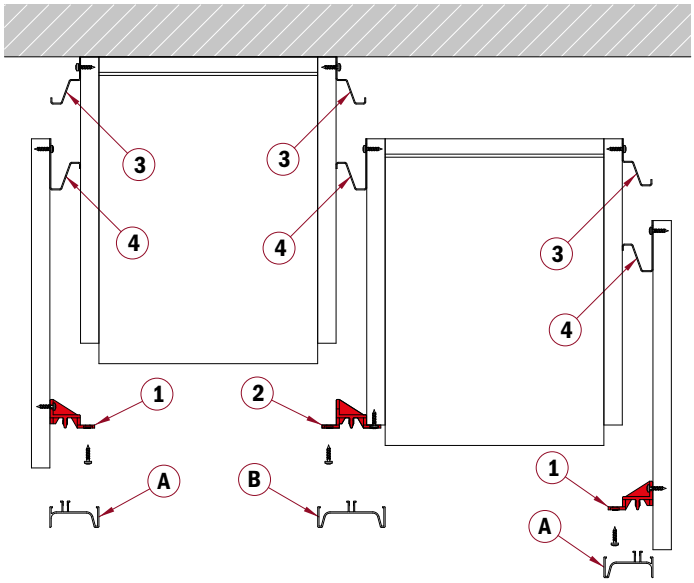

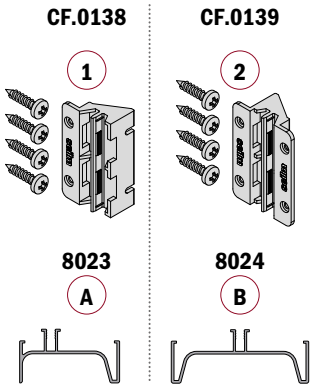

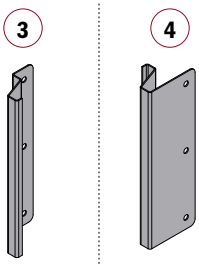

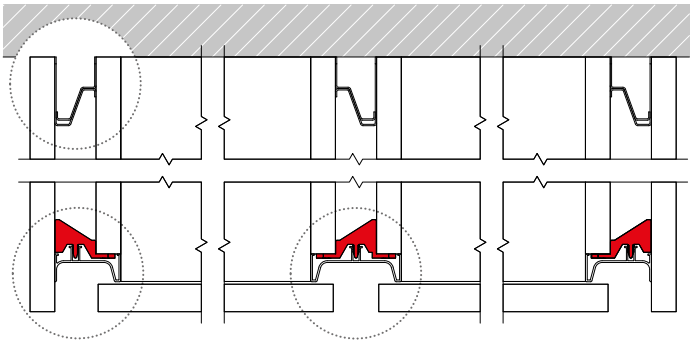

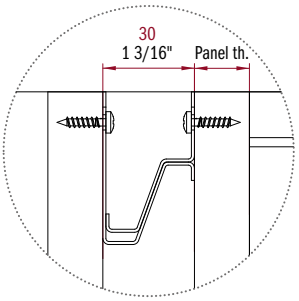

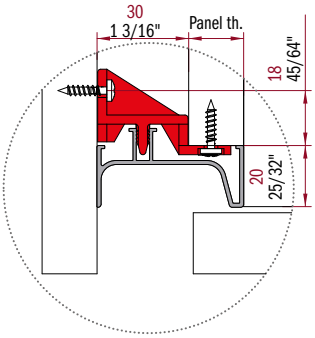

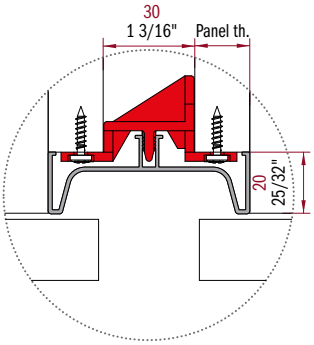

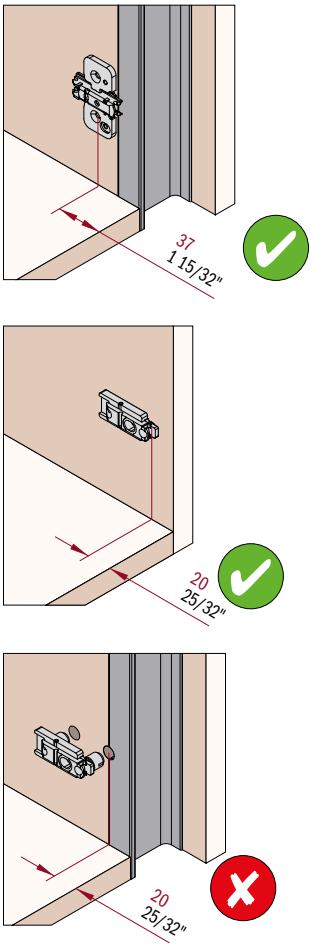

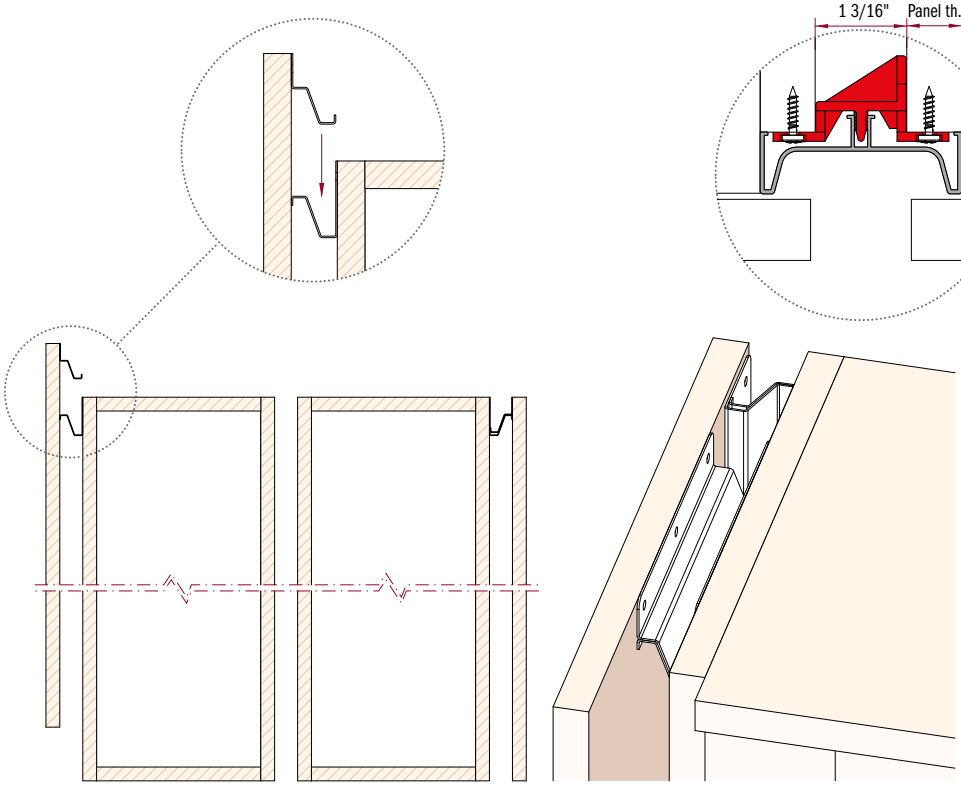

8024

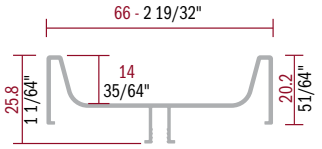

"GOLA" VERTICAL ALUMINUM SPACER CHANNEL PROFILE FOR CABINET
50S Aluminum Clear Anodize
S2I Aluminum Titanium Anodize
SB1 Aluminum Stainless Anodize
V01 Aluminum White Semi-Gloss Powder Coated
V12 Aluminum Black Matt Powder Coated
LU5 Aluminum Chrome Anodize
Other Colors and Lengths Available FROM ITALY

"GOLA" PROFILÉ D'ESPACEMENT VERTICAL EN ALUMINIUM POUR ARMOIRE
50S Aluminium Clair Anodisé
S2I Aluminium Titanium Anodisé
SB1 Aluminium Inox Anodisé
V01 Aluminium Blanc Semi-Lustre Peint à Poudre
V12 Aluminium Noir Mat Peint à Poudre
LU5 Aluminium Chrome Anodisé
Autres Couleurs et Longueurs Disponibles DE L'ITALIE

PERFIL "GOLA" VERTICAL EN ALUMINIO PARA MUEBLE
50S Aluminio Anodizado Claro
S2I Aluminio Anodizado Titanio
SB1 Aluminio Anodizado Inox
V01 Aluminio Blanco Semi-Brillo Barnizado
V12 Aluminio Negro Mate Barnizado
LU5 Aluminio Anodizado Cromo
Otros Colores y Dimensiones Disonibles DE ITALIA

COLORS	ITEM NUMBER		LENGTH	PCS PER BOX	BOX DIMENSION mm W x D x H	BOX DIMENSION inch W x D x H	BOX WEIGHT KG	BOX WEIGHT LB	STOCK IN AMERICA MSRP PRICING USD METER	FOOT	EACH	BOX
50S	U802450SL27	2670	105 1/8"	5	2740 x 120 x 90	107 7/8" x 4 3/4" x 3 1/2"	9.00	19.84	25.627	7.811	68.424	342.120
S2I	U8024S2IL27	2670	105 1/8"	5	2740 x 120 x 90	107 7/8" x 4 3/4" x 3 1/2"	9.00	19.84	31.810	9.696	84.933	424.664
SB1	U8024SB1L27	2670	105 1/8"	5	2740 x 120 x 90	107 7/8" x 4 3/4" x 3 1/2"	9.00	19.84	35.244	10.742	94.101	470.507
V01	U8024V01L27	2670	105 1/8"	5	2740 x 120 x 90	107 7/8" x 4 3/4" x 3 1/2"	9.00	19.84	25.627	7.811	68.424	342.120
V12	U8024V12L27	2670	105 1/8"	5	2740 x 120 x 90	107 7/8" x 4 3/4" x 3 1/2"	9.00	19.84	26.929	8.208	71.900	359.502
									AVAILABLE FROM ITALY MSRP PRICING USD			
50S	802450SL45	4500	177 3/16"		<<<<< MINIMUM ORDER AND PACKAGING TO BE CONFIRMED >>>>>				21.260	6.480	95.670	-
LU5	8024LU5L45	4500	177 3/16"		<<<<< MINIMUM ORDER AND PACKAGING TO BE CONFIRMED >>>>>				29.340	8.943	132.030	-
S2I	8024S2IL45	4500	177 3/16"		<<<<< MINIMUM ORDER AND PACKAGING TO BE CONFIRMED >>>>>				26.922	8.206	121.149	-
SB1	8024SB1L45	4500	177 3/16"		<<<<< MINIMUM ORDER AND PACKAGING TO BE CONFIRMED >>>>>				29.913	9.117	134.609	-
V01	8024V01L45	4500	177 3/16"		<<<<< MINIMUM ORDER AND PACKAGING TO BE CONFIRMED >>>>>				21.260	6.480	95.670	-
V12	8024V12L45	4500	177 3/16"		<<<<< MINIMUM ORDER AND PACKAGING TO BE CONFIRMED >>>>>				22.379	6.821	100.706	-

8023

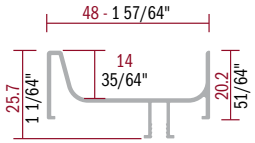

"GOLA" VERTICAL ALUMINUM SPACER CHANNEL PROFILE FOR CABINET
50S Aluminum Clear Anodize
S2I Aluminum Titanium Anodize
SB1 Aluminum Stainless Anodize
V01 Aluminum White Semi-Gloss Powder Coated
V12 Aluminum Black Matt Powder Coated
LU5 Aluminum Chrome Anodize
Other Colors and Lengths Available FROM ITALY

"GOLA" PROFILÉ D'ESPACEMENT VERTICAL EN ALUMINIUM POUR ARMOIRE
50S Aluminium Clair Anodisé
S2I Aluminium Titanium Anodisé
SB1 Aluminium Inox Anodisé
V01 Aluminium Blanc Semi-Lustre Peint à Poudre
V12 Aluminium Noir Mat Peint à Poudre
LU5 Aluminium Chrome Anodisé
Autres Couleurs et Longueurs Disponibles DE L'ITALIE

PERFIL "GOLA" VERTICAL EN ALUMINIO PARA MUEBLE BAJO
50S Aluminio Anodizado Claro
S2I Aluminio Anodizado Titanio
SB1 Aluminio Anodizado Inox
V01 Aluminio Blanco Semi-Brillo Barnizado
V12 Aluminio Negro Mate Barnizado
LU5 Aluminio Anodizado Cromo
Otros Colores y Dimensiones DE ITALIA

COLORS	ITEM NUMBER		LENGTH	PCS PER BOX	BOX DIMENSION mm W x D x H	BOX DIMENSION inch W x D x H	BOX WEIGHT KG	BOX WEIGHT LB	STOCK IN AMERICA MSRP PRICING USD METER	FOOT	EACH	BOX
50S	U802350SL27	2670	105 1/8"	5	2740 x 120 x 90	107 7/8" x 4 3/4" x 3 1/2"	7.50	16.53	22.949	6.995	61.274	306.369
S2I	U8023S2IL27	2670	105 1/8"	5	2740 x 120 x 90	107 7/8" x 4 3/4" x 3 1/2"	7.50	16.53	26.030	7.934	69.500	347.501
SB1	U8023SB1L27	2670	105 1/8"	5	2740 x 120 x 90	107 7/8" x 4 3/4" x 3 1/2"	7.50	16.53	28.823	8.785	76.957	384.787
V01	U8023V01L27	2670	105 1/8"	5	2740 x 120 x 90	107 7/8" x 4 3/4" x 3 1/2"	7.50	16.53	22.949	6.995	61.274	306.369
V12	U8023V12L27	2670	105 1/8"	5	2740 x 120 x 90	107 7/8" x 4 3/4" x 3 1/2"	7.50	16.53	24.110	7.349	64.374	321.869
									AVAILABLE FROM ITALY MSRP PRICING USD			
50S	802350SL45	4500	177 3/16"		<<<<< MINIMUM ORDER AND PACKAGING TO BE CONFIRMED >>>>>				18.841	5.743	84.785	
LU5	8023LU5L45	4500	177 3/16"		<<<<< MINIMUM ORDER AND PACKAGING TO BE CONFIRMED >>>>>				23.687	7.220	106.592	
S2I	8023S2IL45	4500	177 3/16"		<<<<< MINIMUM ORDER AND PACKAGING TO BE CONFIRMED >>>>>				21.800	6.645	98.100	
SB1	8023SB1L45	4500	177 3/16"		<<<<< MINIMUM ORDER AND PACKAGING TO BE CONFIRMED >>>>>				24.222	7.383	108.999	
V01	8023V01L45	4500	177 3/16"		<<<<< MINIMUM ORDER AND PACKAGING TO BE CONFIRMED >>>>>				18.841	5.743	84.785	
V12	8023V12L45	4500	177 3/16"		<<<<< MINIMUM ORDER AND PACKAGING TO BE CONFIRMED >>>>>				19.832	6.045	89.244	

CF 0139

KIT OF BRACKETS FOR GOLA PROFILE 8024
1 kit includes 1 bracket + 4 screws

KIT DE FIXATION POUR GOLA VERTICAL 8024
1 ensemble: 1 support + 6 vis de fixation

KIT OF BRACKETS FOR GOLA PROFILE 8023
1 kit includes 1 bracket + 4 screws

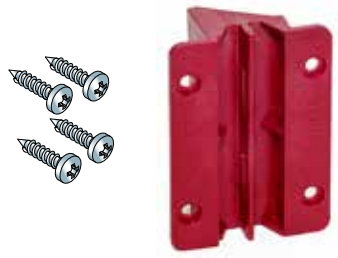

COLORS	ITEM NUMBER	KIT PER BOX	BOX DIMENSION mm W x D x H	BOX DIMENSION inch W x D x H	BOX WEIGHT KG	BOX WEIGHT LB	STOCK IN AMERICA MSRP PRICING USD METER	FOOT	KIT	BOX
	UCF.0139SF	25	220 x 165 x 140	8 5/8" x 6 1/2" x 5 1/2"	1.00	2.20			2.521	63.025

CF 0138

KIT OF BRACKETS FOR GOLA PROFILE 8023
1 kit includes 1 bracket + 4 screws

KIT DE FIXATION POUR GOLA VERTICAL 8023
1 ensemble: 1 support + 6 vis de fixation

KIT SOPORTE PARA GOLA 8023
1 set : 1 soporte + 4 tornillos

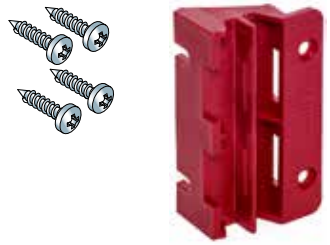

COLORS	ITEM NUMBER	KIT PER BOX	BOX DIMENSION mm W x D x H	BOX DIMENSION inch W x D x H	BOX WEIGHT KG	BOX WEIGHT LB	STOCK IN AMERICA MSRP PRICING USD METER	FOOT	KIT	BOX
	UCF.0138SF - - - -	25	220 x 165 x 140	8 5/8" x 6 1/2" x 5 1/2"	1.00	2.20			2.521	63.025

CF 0177

SPACER BRACKETS
FOR VERTICAL GOLA
1 Kit includes R & L Brackets + 6 Screws

SUPPORT DE ESPACEMENT
POUR GOLA VERTICAL
1 Ensemble contient Supports D & G + 6 Vis de Fixation

SOPORTE ESPACIADOR
Set 1+1 D&I Soporte + 6 tornillos de Fijación

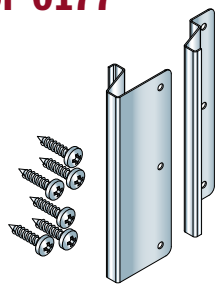

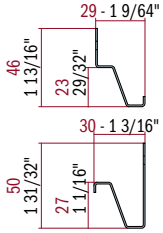

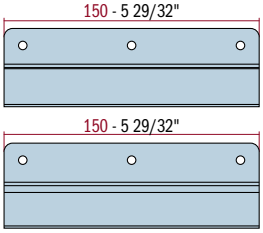

ITEM NUMBER	KIT PER BOX	BOX DIMENSION mm W x D x H	BOX DIMENSION inch W x D x H	BOX WEIGHT KG	BOX WEIGHT LB	STOCK IN AMERICA MSRP PRICING USD KIT	BOX
UCF.0177	25	215 x 160 x 130	8 1/2" x 6 1/4" x 5 1/8"	6.5	14.33	5.737	143.425

scilm AMERICA

VERTICAL L & C SHAPE "GOLA" PROFILE

Technical Specifications...
- Material: Aluminum
- Performance: Aluminum extrusion with high quality anodized finishes
- Environment: 100% recyclable materials

Spécifications Techniques...
- *Matériel: Aluminium*
- *Performance: Extrusion d'aluminium avec finitions anodisées de haute qualité*
- *Environnement: Matériaux 100% recyclables*

Especificaciones Técnicas...
- Material: Aluminio
- Rendimiento: Extrusión de aluminio con acabados anodizado de alta calidad
- Medio Ambiente: Materiales 100% reciclables

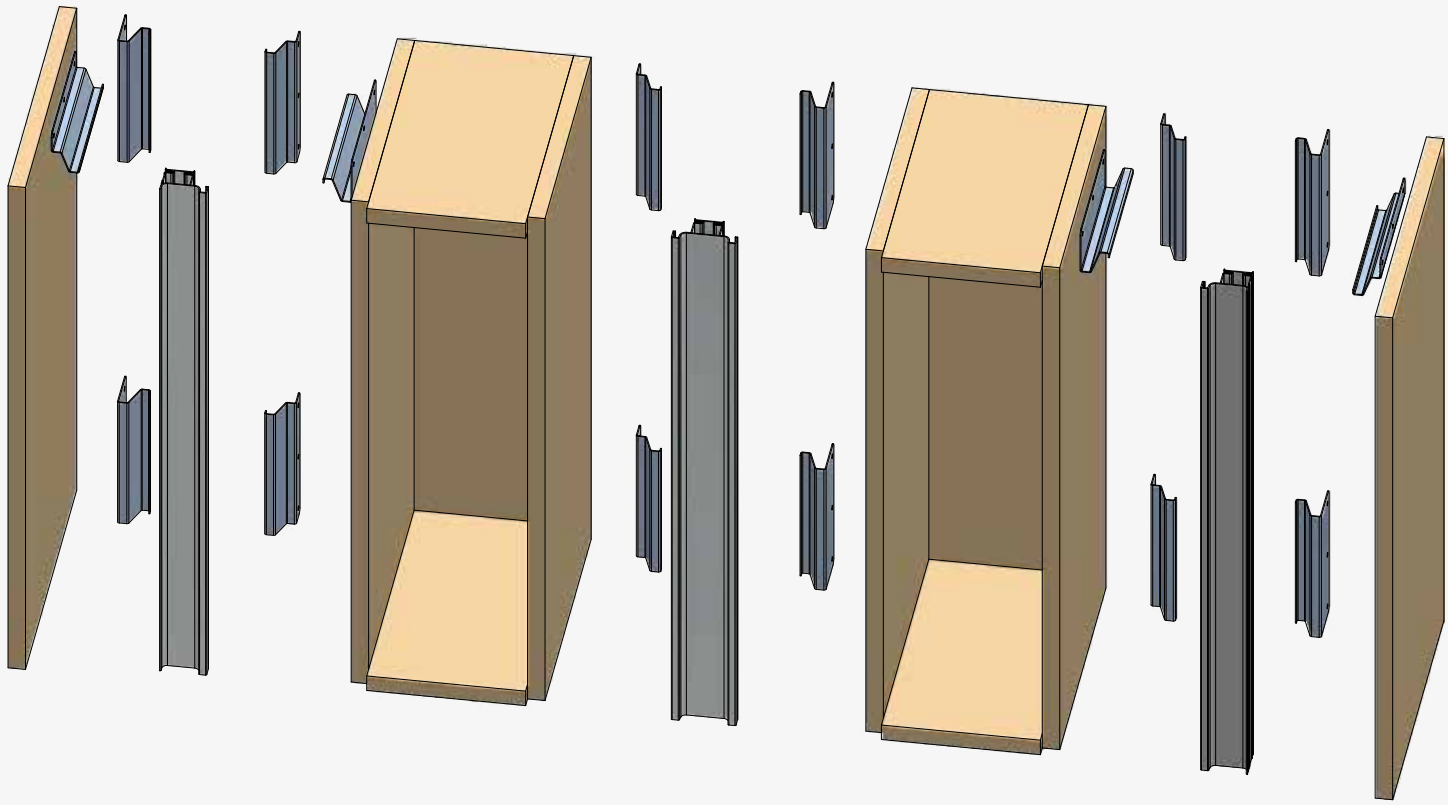

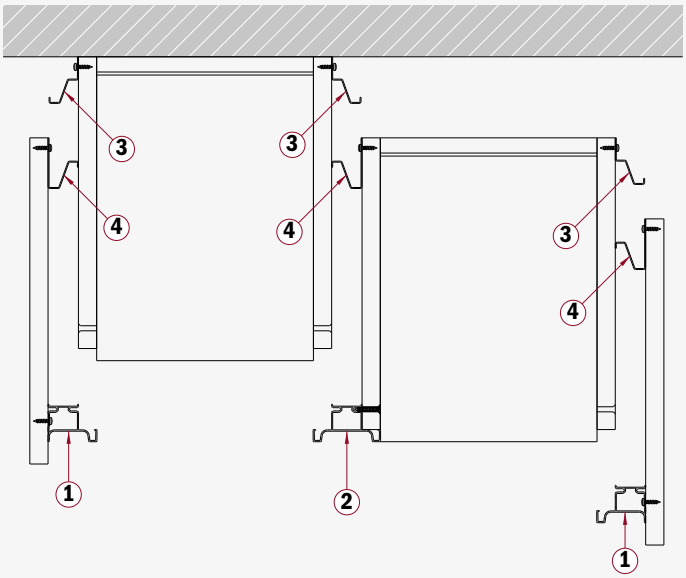

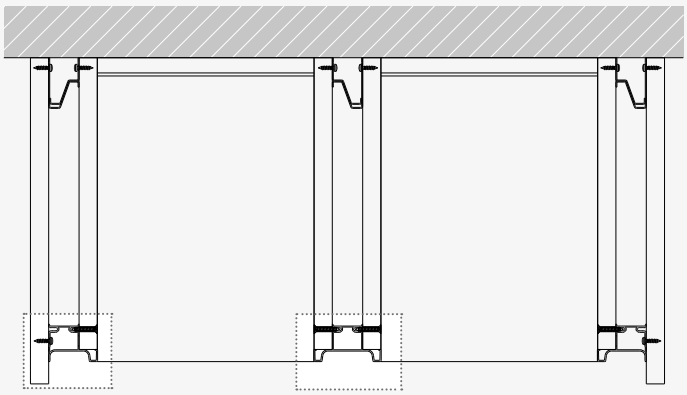

A B

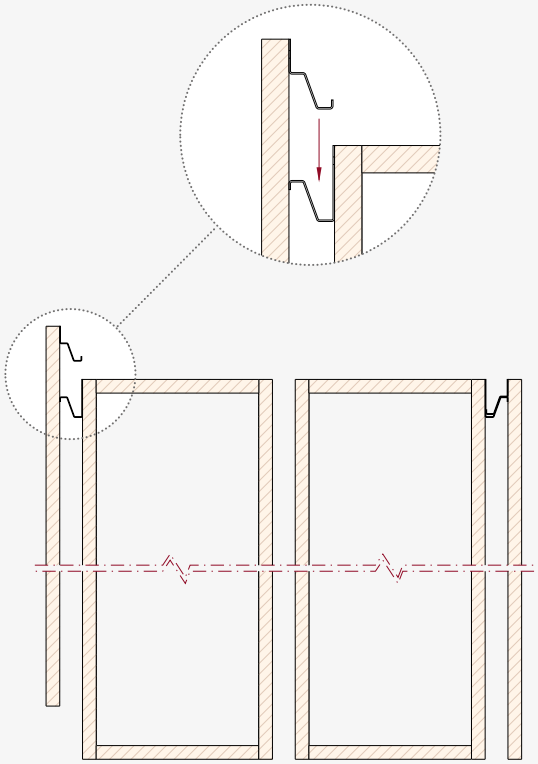

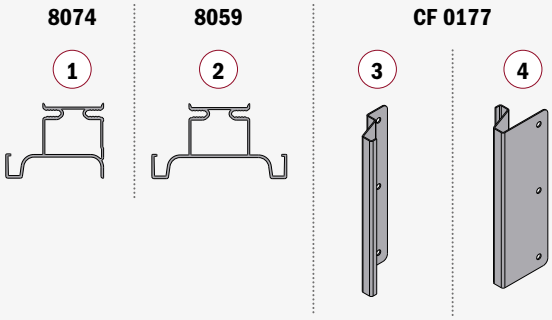

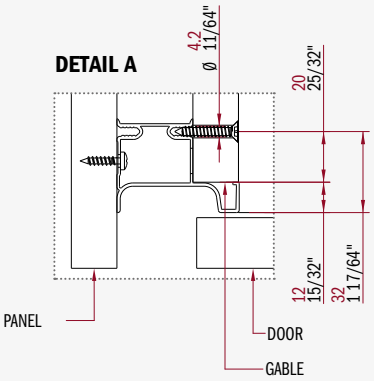

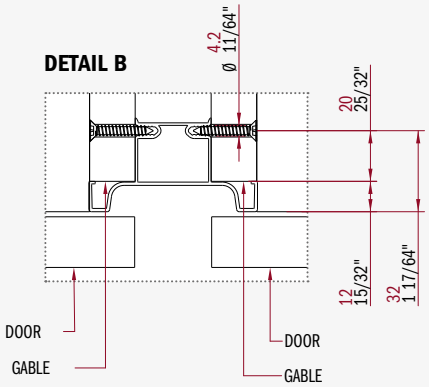

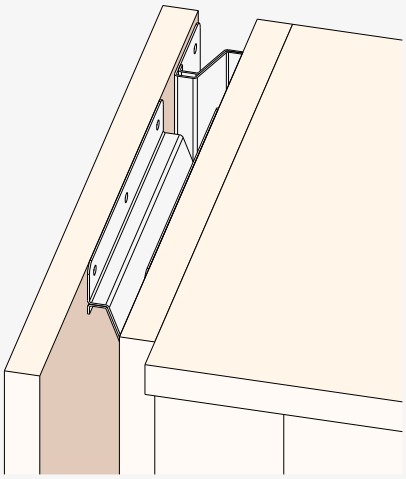

scilm AMERICA

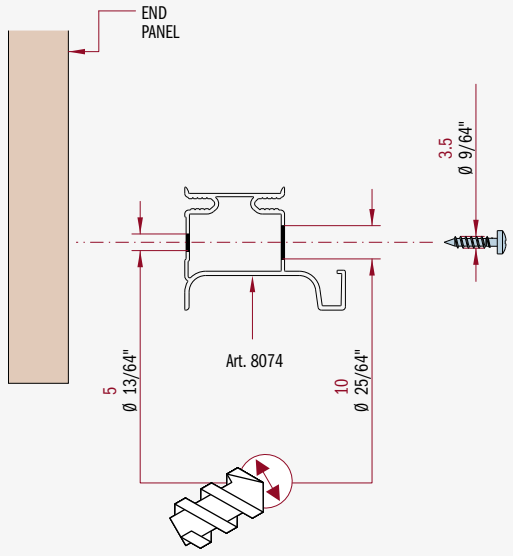

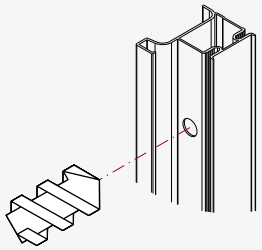

STEP 1

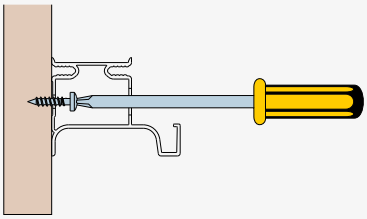

STEP 2

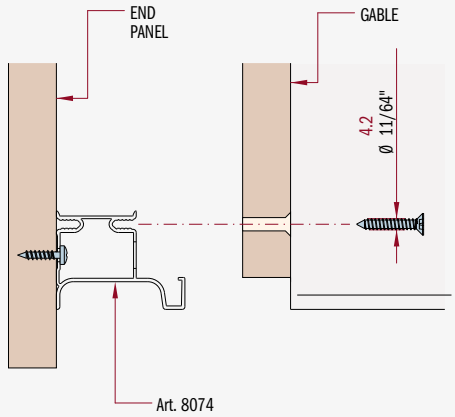

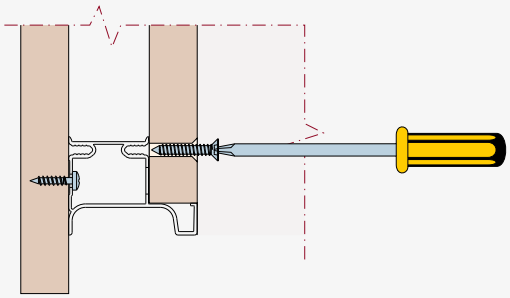

STEP 3

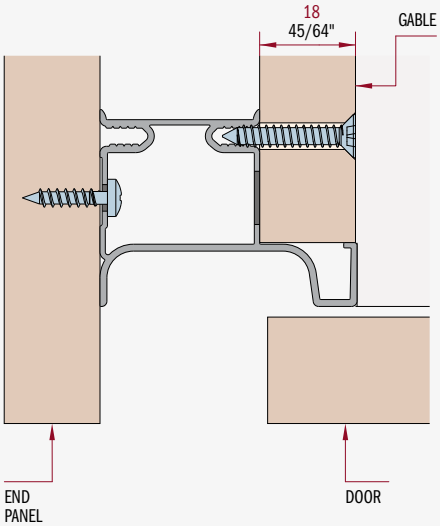

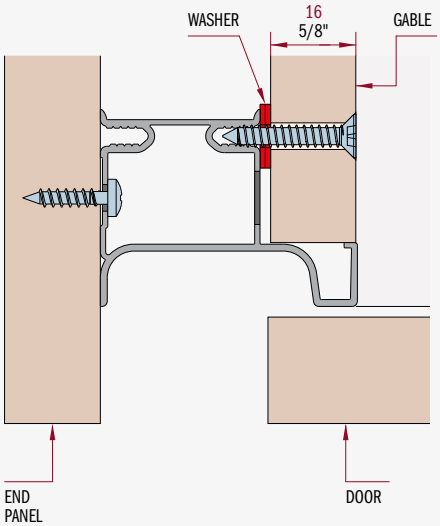

For 16mm - 5/8" gables, use a 2mm - 5/64" spacer between the Gable and the Gola profile

Pour les côtés de 16mm - 5/8", utilisez un espaceur de 2mm - 5/64" entre le côté et le profilé Gola

Para los costados de 16mm - 5/8", use un grosor de 2mm - 5/64" entre el costado y el perfil Gola

8059

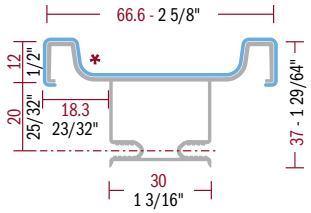

"GOLA" VERTICAL ALUMINUM SPACER CHANNEL PROFILE FOR CABINET
50S Aluminum Clear Anodize
S2I Aluminum Titanium Anodize
SB1 Aluminum Stainless Anodize
V01 Aluminum White Semi-Gloss Powder Coated
V12 Aluminum Black Matt Powder Coated
LU5 Aluminum Chrome Anodize
Other Colors and Lengths Available FROM ITALY

"GOLA" PROFILÉ D'ESPACEMENT VERTICAL EN ALUMINIUM POUR ARMOIRE
50S Aluminium Clair Anodisé
S2I Aluminium Titanium Anodisé
SB1 Aluminium Inox Anodisé
V01 Aluminium Blanc Semi-Lustre Peint à Poudre
V12 Aluminium Noir Mat Peint à Poudre
LU5 Aluminium Chrome Anodisé
Autres Couleurs et Longueurs Disponibles DE L'ITALIE

PERFIL "GOLA" VERTICAL EN ALUMINIO PARA MUEBLE
50S Aluminio Anodizado Claro
S2I Aluminio Anodizado Titanio
SB1 Aluminio Anodizado Inox
V01 Aluminio Blanco Semi-Brillo Barnizado
V12 Aluminio Negro Mate Barnizado
LU5 Aluminio Anodizado Cromo
Otros Colores y Dimensiones Disonibles DE ITALIA

COLORS	ITEM NUMBER	LENGTH mm	LENGTH inch	PCS PER BOX	BOX DIMENSION mm W x D x H	BOX DIMENSION inch W x D x H	BOX WEIGHT KG	BOX WEIGHT LB	STOCK IN AMERICA MSRP PRICING USD METER	FOOT	EACH	BOX
50S	U805950SL27	2670	105 1/8"	5	2740 x 215 x 95	107 7/8" x 8 1/2" x 3 3/4"	11.20	24.69	24.154	7.362	64.491	322.456
S2I	U8059S2IL27	2670	105 1/8"	5	2740 x 215 x 95	107 7/8" x 8 1/2" x 3 3/4"	11.20	24.69	31.065	9.469	82.944	414.718
SB1	U8059SB1L27	2670	105 1/8"	5	2740 x 215 x 95	107 7/8" x 8 1/2" x 3 3/4"	11.20	24.69	41.008	12.499	109.491	547.457
V01	U8059V01L27	2670	105 1/8"	5	2740 x 215 x 95	107 7/8" x 8 1/2" x 3 3/4"	11.20	24.69	24.392	7.435	65.127	325.633
V12	U8059V12L27	2670	105 1/8"	5	2740 x 215 x 95	107 7/8" x 8 1/2" x 3 3/4"	11.20	24.69	24.881	7.584	66.432	332.161
									AVAILABLE FROM ITALY MSRP PRICING USD			
50S	805950SL45	4500	177 3/16"		<<<<< MINIMUM ORDER AND PACKAGING TO BE CONFIRMED >>>>>				18.842	5.743	84.789	
S2I	8059LU5L45	4500	177 3/16"		<<<<< MINIMUM ORDER AND PACKAGING TO BE CONFIRMED >>>>>				26.614	8.112	119.763	
SB1	8059S2IL45	4500	177 3/16"		<<<<< MINIMUM ORDER AND PACKAGING TO BE CONFIRMED >>>>>				23.791	7.251	107.060	
V01	8059SB1L45	4500	177 3/16"		<<<<< MINIMUM ORDER AND PACKAGING TO BE CONFIRMED >>>>>				30.749	9.372	138.371	
V12	8059V01L45	4500	177 3/16"		<<<<< MINIMUM ORDER AND PACKAGING TO BE CONFIRMED >>>>>				19.034	5.802	85.653	
LU5	8059V12L45	4500	177 3/16"		<<<<< MINIMUM ORDER AND PACKAGING TO BE CONFIRMED >>>>>				19.431	5.923	87.440	

8074

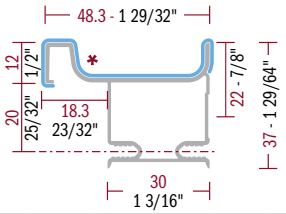

"GOLA" VERTICAL ALUMINUM SPACER CHANNEL PROFILE FOR CABINET
50S Aluminum Clear Anodize
S2I Aluminum Titanium Anodize
SB1 Aluminum Stainless Anodize
V01 Aluminum White Semi-Gloss Powder Coated
V12 Aluminum Black Matt Powder Coated
LU5 Aluminum Chrome Anodize
Other Colors and Lengths Available FROM ITALY

"GOLA" PROFILÉ D'ESPACEMENT VERTICAL EN ALUMINIUM POUR ARMOIRE
50S Aluminium Clair Anodisé
S2I Aluminium Titanium Anodisé
SB1 Aluminium Inox Anodisé
V01 Aluminium Blanc Semi-Lustre Peint à Poudre
V12 Aluminium Noir Mat Peint à Poudre
LU5 Aluminium Chrome Anodisé
Autres Couleurs et Longueurs Disponibles DE L'ITALIE

PERFIL "GOLA" VERTICAL EN ALUMINIO PARA MUEBLE BAJO
50S Aluminio Anodizado Claro
S2I Aluminio Anodizado Titanio
SB1 Aluminio Anodizado Inox
V01 Aluminio Blanco Semi-Brillo Barnizado
V12 Aluminio Negro Mate Barnizado
LU5 Aluminio Anodizado Cromo
Otros Colores y Dimensiones DE ITALIA

COLORS	ITEM NUMBER	LENGTH mm	LENGTH inch	PCS PER BOX	BOX DIMENSION mm W x D x H	BOX DIMENSION inch W x D x H	BOX WEIGHT KG	BOX WEIGHT LB	STOCK IN AMERICA MSRP PRICING USD METER	FOOT	EACH	BOX
50S	U807450SL27	2670	105 1/8"	5	2740 x 150 x 95	107 7/8" x 5 7/8" x 3 3/4"	9.50	20.94	21.341	6.505	56.980	284.902
S2I	U8074S2IL27	2670	105 1/8"	5	2740 x 150 x 95	107 7/8" x 5 7/8" x 3 3/4"	9.50	20.94	30.396	9.265	81.157	405.787
SB1	U8074SB1L27	2670	105 1/8"	5	2740 x 150 x 95	107 7/8" x 5 7/8" x 3 3/4"	9.50	20.94	34.609	10.549	92.406	462.030
V01	U8074V01L27	2670	105 1/8"	5	2740 x 150 x 95	107 7/8" x 5 7/8" x 3 3/4"	9.50	20.94	21.550	6.568	57.539	287.693
V12	U8074V12L27	2670	105 1/8"	5	2740 x 150 x 95	107 7/8" x 5 7/8" x 3 3/4"	9.50	20.94	21.980	6.700	58.687	293.433
									AVAILABLE FROM ITALY MSRP PRICING USD			
50S	807450SL45	4500	177 3/16"		<<<<< MINIMUM ORDER AND PACKAGING TO BE CONFIRMED >>>>>				16.406	5.001	73.827	
S2I	8074LU5L45	4500	177 3/16"		<<<<< MINIMUM ORDER AND PACKAGING TO BE CONFIRMED >>>>>				22.596	6.887	101.682	
SB1	8074S2IL45	4500	177 3/16"		<<<<< MINIMUM ORDER AND PACKAGING TO BE CONFIRMED >>>>>				20.415	6.222	91.868	
V01	8074SB1L45	4500	177 3/16"		<<<<< MINIMUM ORDER AND PACKAGING TO BE CONFIRMED >>>>>				23.799	7.254	107.096	
V12	8074V01L45	4500	177 3/16"		<<<<< MINIMUM ORDER AND PACKAGING TO BE CONFIRMED >>>>>				16.573	5.051	74.579	
LU5	8074V12L45	4500	177 3/16"		<<<<< MINIMUM ORDER AND PACKAGING TO BE CONFIRMED >>>>>				16.918	5.157	76.131	

CF 0177

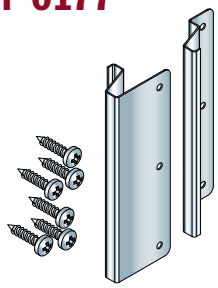

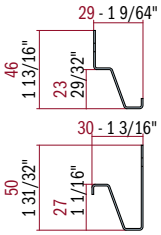

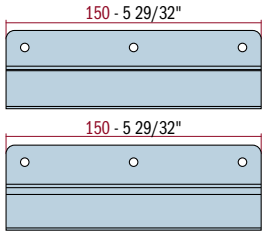

SPACER BRACKETS
FOR VERTICAL GOLA
1 Kit includes R & L Brackets + 6 Screws

SUPPORT DE ESPACEMENT POUR GOLA VERTICAL
1 Ensemble contient Supports D & G + 6 Vis de Fixation

SOPORTE ESPACIADOR
Set 1+1 D&I Soporte + 6 tornillos de Fijación

ITEM NUMBER	KIT PER BOX	BOX DIMENSION mm W x D x H	BOX DIMENSION inch W x D x H	BOX WEIGHT KG	BOX WEIGHT LB	STOCK IN AMERICA MSRP PRICING USD KIT	BOX
UCF.0177	25	215 x 160 x 130	8 1/2" x 6 1/4" x 5 1/8"	6.5	14.33	5.737	143.425

GOLA PROFILE FOR UPPER CABINET

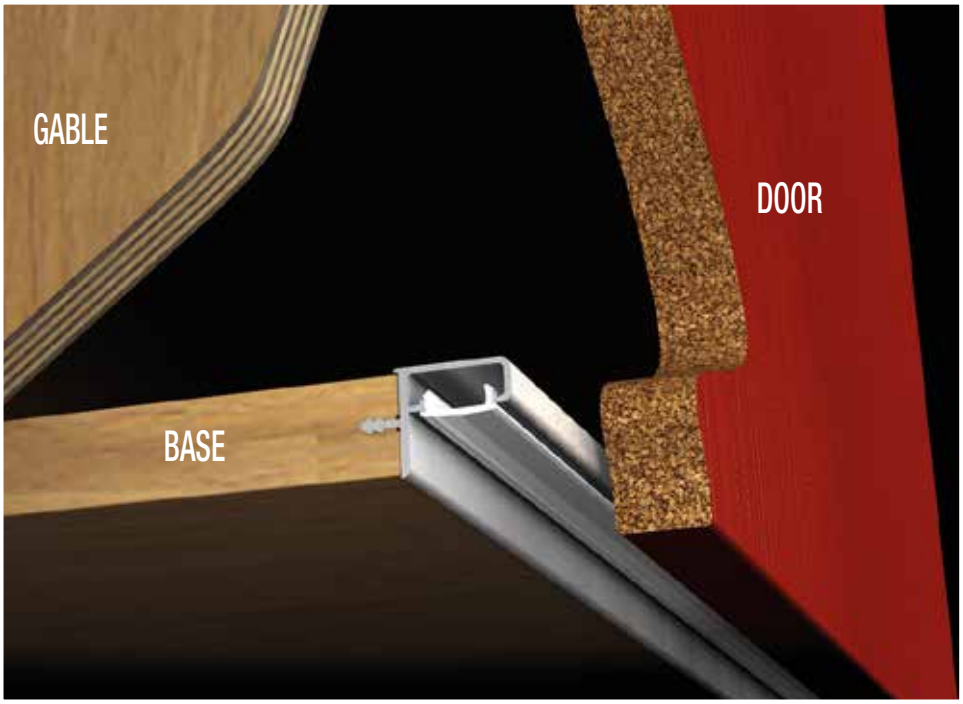

1730

"GOLA" HORIZONTAL ALUMINUM SPACER CHANNEL PROFILE FOR UPPER CABINET
50S Aluminum Clear Anodize
Other Colors and Lengths Available FROM ITALY

"GOLA" PROFILÉ D'ESPACEMENT HORIZONTALE EN ALUMINIUM POUR ARMOIRE DU HAUT
50S Aluminium Clair Anodisé
Autres Couleurs et Longueurs Disponibles DE L'ITALIE

PERFIL GOLA HORIZONTAL SUPERIOR EN ALUMINIO PARA MUEBLE ALTO
50S Aluminio Anodizado Claro
Otras Colores y Terminaciones Disponibles DE ITALIA

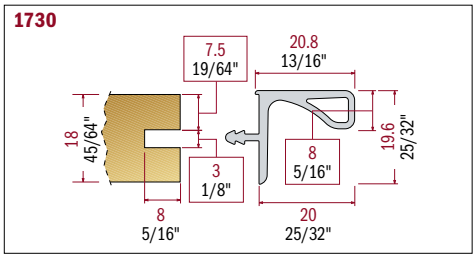

COLORS	ITEM NUMBER	LENGTH		PCS PER BOX	BOX DIMENSION		BOX WEIGHT		STOCK IN AMERICA MSRP PRICING USD			
					mm	inch						
		mm	inch		W x D x H	W x D x H	KG	LB	METER	FOOT	EACH	BOX
50S	U173050SL27	2670	105 1/8"	10	2740 x 95 x 65	107 7/8" x 3 3/4" x 2 1/2"	7.50	16.53	10.644	3.244	28.419	284.195
50S	U173050SL39	3900	153 9/16''	10	3950 x 95 x 65	155 1/2" x 3 3/4" x 2 1/2"	12.50	27.56	10.234	3.119	39.913	399.126

1746

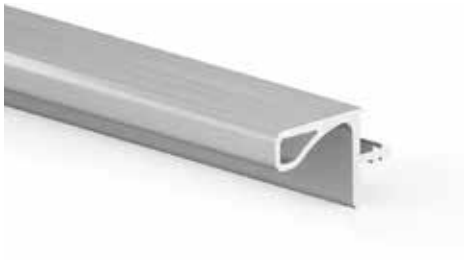

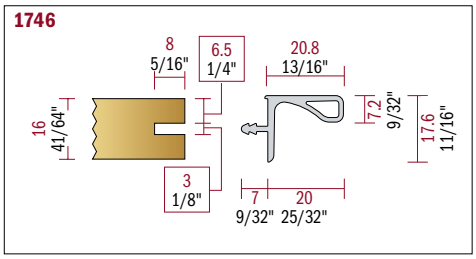

COLORS	ITEM NUMBER	LENGTH		PCS PER BOX	BOX DIMENSION		BOX WEIGHT		STOCK IN AMERICA MSRP PRICING USD			
					mm	inch						
		mm	inch		W x D x H	W x D x H	KG	LB	METER	FOOT	EACH	BOX
50S	U174650SL27	2670	105 1/8"	10	2740 x 95 x 65	107 7/8" x 3 3/4" x 2 1/2"	7.50	16.53	10.644	3.244	28.419	284.195
50S	U174650SL39	3900	153 9/16''	10	3950 x 95 x 65	155 1/2" x 3 3/4" x 2 1/2"	10.43	22.99	10.234	3.119	39.913	399.126

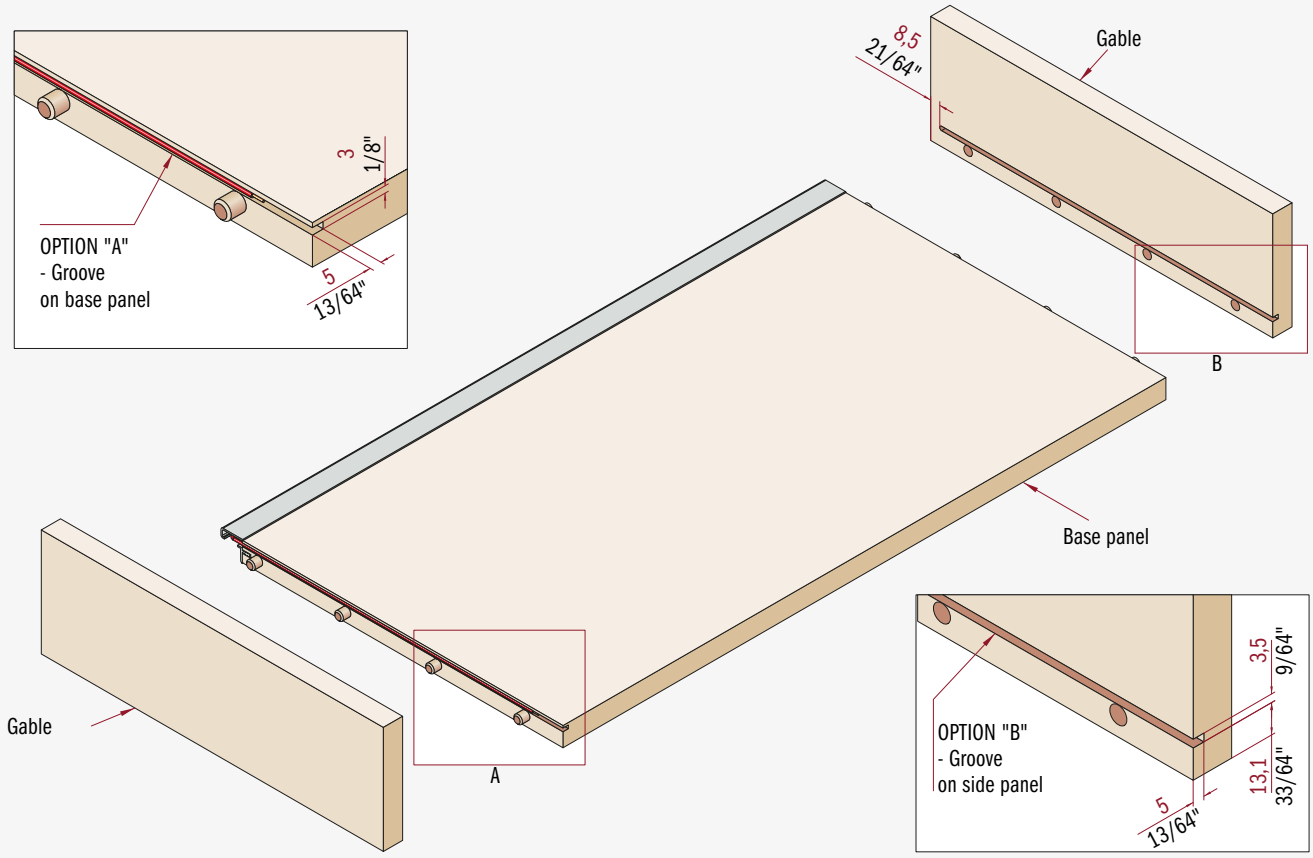

1730L

"GOLA" HORIZONTAL ALUMINUM SPACER CHANNEL PROFILE FOR UPPER CABINET WITH SLOT FOR LED STRIP, TRANSLUCENT DIFFUSER INCLUDED
50S Aluminum Clear Anodize
Other Colors and Lengths Available FROM ITALY

"GOLA" PROFILÉ D'ESPACEMENT HORIZONTAL EN ALUMINIUM POUR ARMOIRE DU HAUT AVEC FENTE POUR STRIP LED, DIFFUSEUR TRANSLUCIDE INCLUS
50S Aluminium Clair Anodisé
Autres Couleurs et Longueurs Disponibles DE L'ITALIE

PERFIL "GOLA" HORIZONTAL SUPERIOR EN ALUMINIO PARA EL MUEBLE ALTO CON BANDA DIFUSORA TRANSLÚCIDA PARA BANDA LED INCLUIDA
50S Aluminio Anodizado Claro
Otras Colores y Terminaciones Disponibles DE ITALIA

Translucent diffuser Included
LED strip not included
For 18/19 mm panel thickness

Diffuseur translucide inclus
Bande LED non inclus
Pour panneau d'une épaisseur de 18/19mm

Banda difusora translúcida incluida
Banda de LED no incluida
Para un espesor del panel de 18/19mm

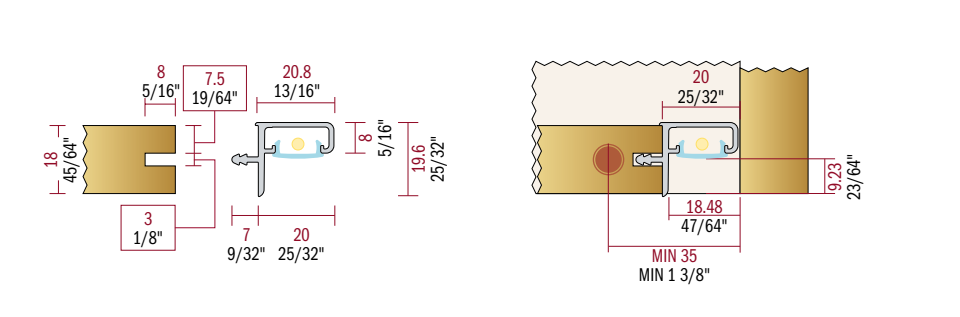

COLORS	ITEM NUMBER	LENGTH		PCS PER BOX	BOX DIMENSION		BOX WEIGHT		STOCK IN AMERICA MSRP PRICING USD			
					mm	inch						
		mm	inch		W x D x H	W x D x H	KG	LB	METER	FOOT	EACH	BOX
50S	U1730L50SL21	2050	80 11/16"	10	2250 x 95 x 65	88 5/8" x 3 3/4" x 2 1/2"	6.00	13.23	21.000	6.401	43.050	430.500
50S	U1730L50SL41	4100	161 7/16"	10	4250 x 95 x 65	167 3/8" x 3 3/4" x 2 1/2"	12.00	26.46	16.738	5.102	68.626	686.258

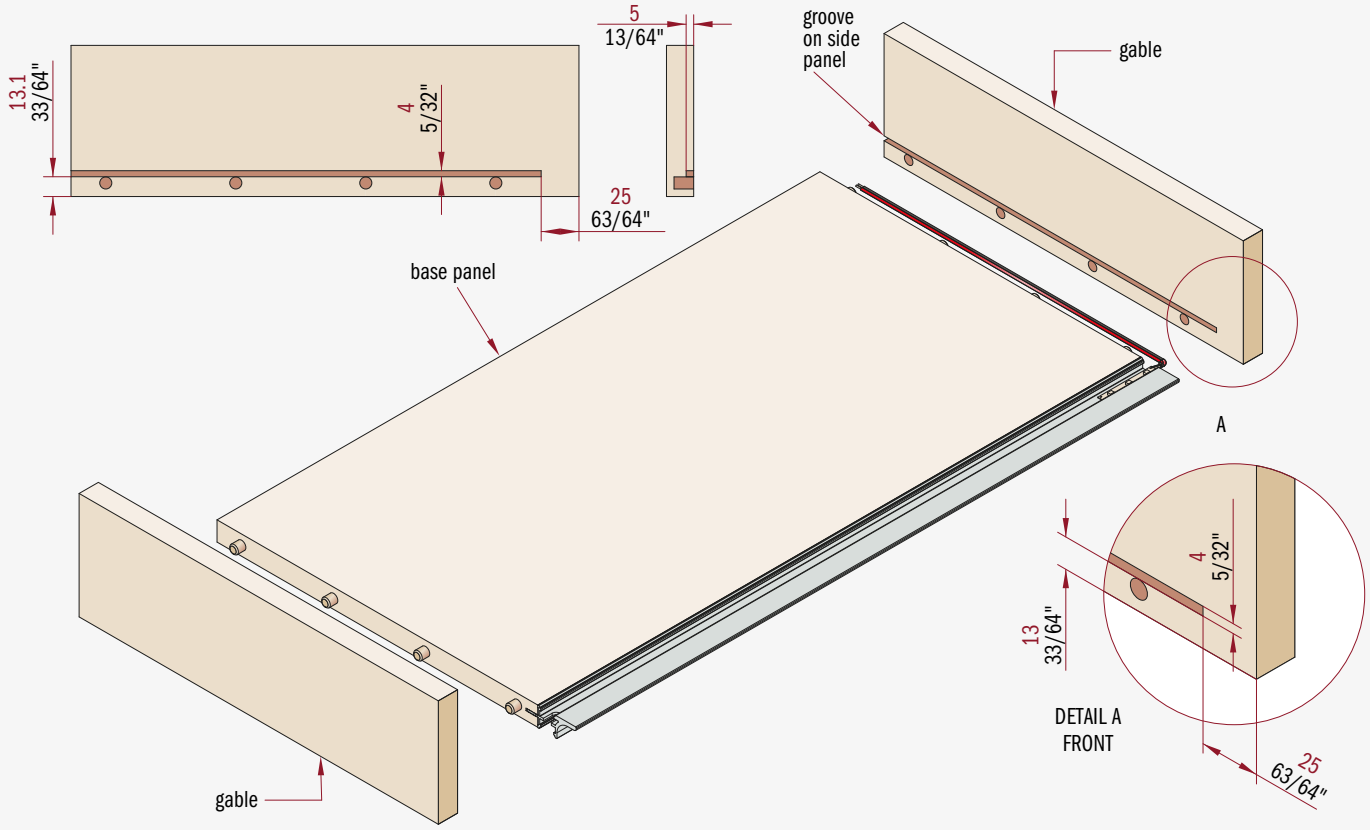

1730L2

"GOLA" HORIZONTAL ALUMINUM SPACER CHANNEL PROFILE FOR UPPER CABINET WITH TWO SLOT FOR LED STRIP, TRANSLUCENT DIFFUSER INCLUDED
50S Aluminum Clear Anodize
Other Colors and Lengths Available FROM ITALY

"GOLA" PROFILÉ D'ESPACEMENT HORIZONTAL EN ALUMINIUM POUR ARMOIRE DU HAUT AVEC DEUX FENTES POUR STRIP LED, DIFFUSEUR TRANSLUCIDE INCLUS
50S Aluminium Clair Anodisé
Autres Couleurs et Longueurs Disponibles DE L'ITALIE

PERFIL "GOLA" HORIZONTAL SUPERIOR EN ALUMINIO PARA EL MUEBLE ALTO CON DOS BANDAS DIFUSORA TRANSLÚCIDA PARA BANDA LED INCLUIDA
50S Aluminio Anodizado Claro
Otras Colores y Terminaciones Disponibles DE ITALIA

Translucent diffuser Included
LED strip not included
For 16 mm panel thickness

Diffuseur translucide inclus
Bande LED non inclus
Pour panneau d'une épaisseur de 16mm

Banda difusora translúcida incluida
Banda de LED no incluida
Para un espesor del panel de 16mm

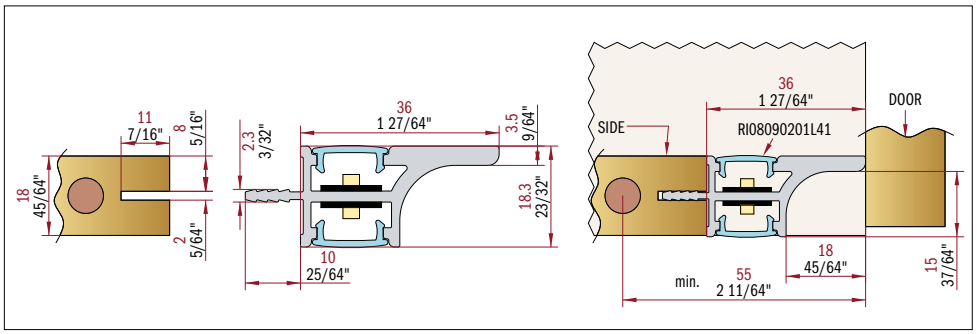

COLORS	ITEM NUMBER	LENGTH		PCS PER BOX	BOX DIMENSION		BOX WEIGHT		AVAILABLE FROM ITALY MSRP PRICING USD			
					mm	inch						
		mm	inch		W x D x H	W x D x H	KG	LB	METER	FOOT	EACH	BOX
50S	R1730L250SL3	3000	118 1/8"		<<<<< MINIMUM ORDER AND PACKAGING TO BE CONFIRMED >>>>>				31.620	9.638	94.860	

scilm AMERICA

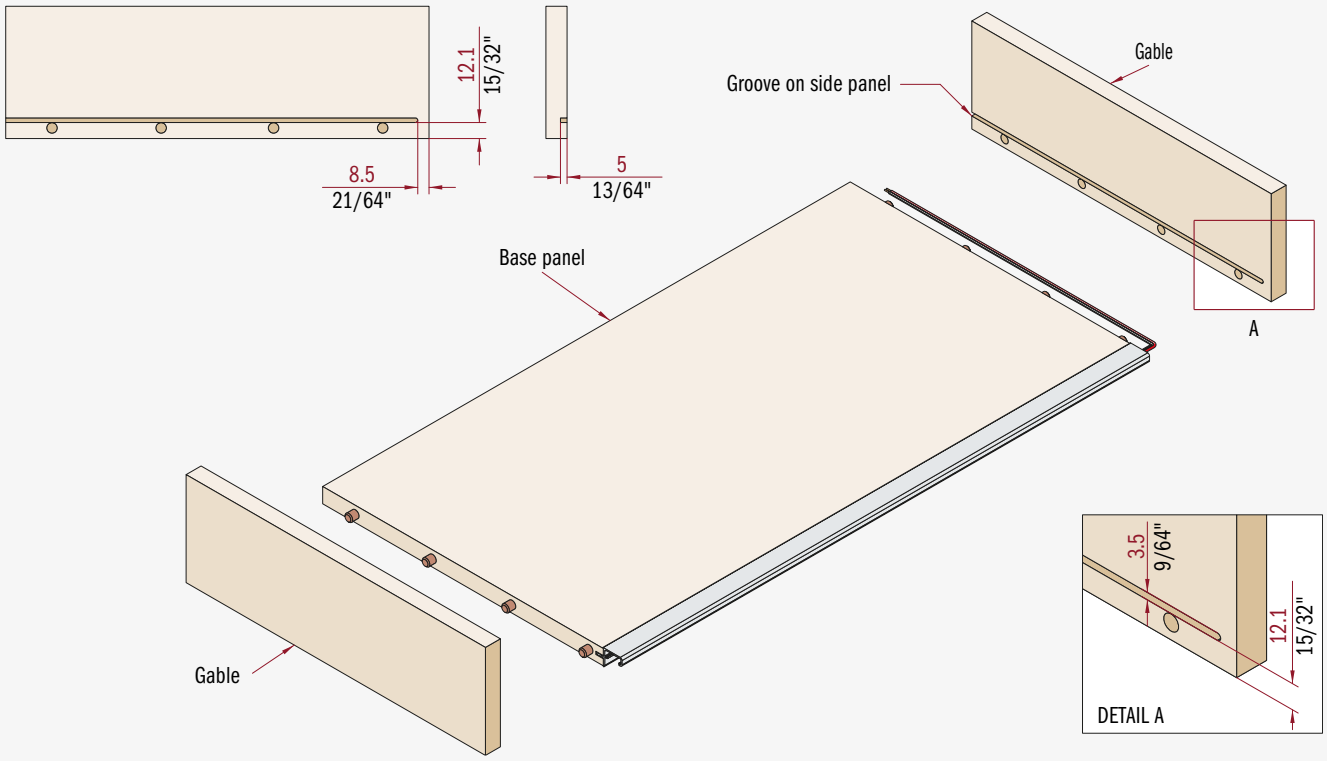

1746L

"GOLA" HORIZONTAL ALUMINUM SPACER CHANNEL PROFILE FOR UPPER CABINET WITH SLOT FOR LED STRIP, TRANSLUCENT DIFFUSER INCLUDED
50S Aluminum Clear Anodize
Other Colors and Lengths Available FROM ITALY

"GOLA" PROFILÉ D'ESPACEMENT HORIZONTAL EN ALUMINIUM POUR ARMOIRE DU HAUT AVEC FENTE POUR STRIP LED, DIFFUSEUR TRANSLUCIDE INCLUS
50S Aluminium Clair Anodisé
Autres Couleurs et Longueurs Disponibles DE L'ITALIE

PERFIL "GOLA" HORIZONTAL SUPERIOR EN ALUMINIO PARA EL MUEBLE ALTO CON BANDA DIFUSORA TRANSLÚCIDA PARA BANDA LED INCLUIDA
50S Aluminio Anodizado Claro
Otras Colores y Terminaciones Disponibles DE ITALIA

Translucent diffuser Included
LED strip not included
For 16 mm panel thickness

Diffuseur translucide inclus
Bande LED non inclus
Pour panneau d'une épaisseur de 16mm

Banda difusora translúcida incluida
Banda de LED no incluida
Para un espesor del panel de 16mm

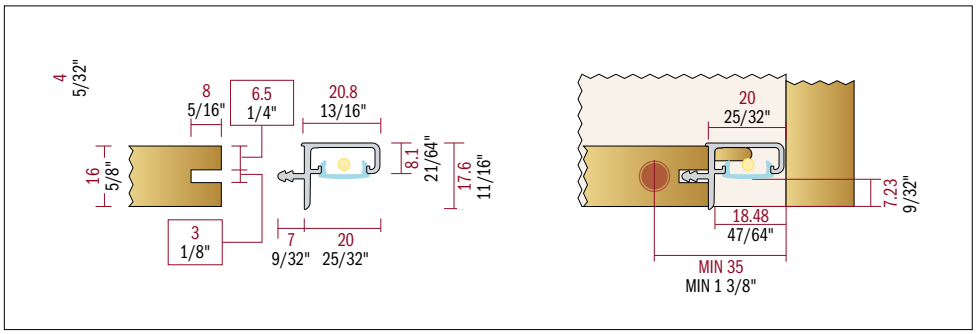

COLORS	ITEM NUMBER	LENGTH		PCS PER BOX	BOX DIMENSION		BOX WEIGHT		STOCK IN AMERICA MSRP PRICING USD			
					mm	inch						
		mm	inch		W x D x H	W x D x H	KG	LB	METER	FOOT	EACH	BOX
50S	U1746L50SL21	2050	80 11/16"	10	2250 x 95 x 65	88 5/8" x 3 3/4" x 2 1/2"	6.00	13.23	21.000	6.401	43.050	430.500
50S	U1746L50SL41	4100	161 7/16"	10	4250 x 95 x 65	167 3/8" x 3 3/4" x 2 1/2"	12.00	26.46	16.738	5.102	68.626	686.258

BACKSPLASH MOLDINGS

Backsplash moldings
Scilm backsplash moldings are composed of a co-extruded section, coupled to an aluminum or resin section, they are available in a wide range of models. The backsplash moldings can be supplied with 90° accessories and feature a soft PVC sealing profile which adapts to the worktop and to the wall, preventing seepages. The Scilm aluminum or PVC backsplash moldings are highly customizable with a range of shapes and finishings, including: anodizing, painting or coating.

Profilés d'étanchéité
Les profilés d'étanchéité Scilm se composent d'un profilé coextrudé accouplé à un profilé en aluminium ou en résine artificielle et sont disponibles en une vaste gamme de modèles. Les profilés d'étanchéité peuvent être fournis avec des accessoires à 90° et sont munis d'une garniture en PVC souple qui s'adapte au plan du meuble et au mur de façon à éviter tout risque d'infiltration. Les profils d'étanchéités Scilm en aluminium ou en PVC sont facilement personnalisables grâce à la variété de formes et de finitions proposées, entre autres anodisation, peinture ou revêtement.

Copetes
Los copetes Scilm consisten en un perfil coextruido acoplado a un perfil de aluminio o resina artificial y están disponibles en una amplia gama de modelos. Los copetes pueden suministrarse con accesorios de 90° y cuentan con una junta de PVC blando que se adapta al tablero del mueble y a la pared, evitando filtraciones. Los copetes de aluminio o PVC Scilm son altamente personalizables gracias a la variedad de formas y acabados ofrecidos, incluyendo anodizado, pintura o revestimiento.

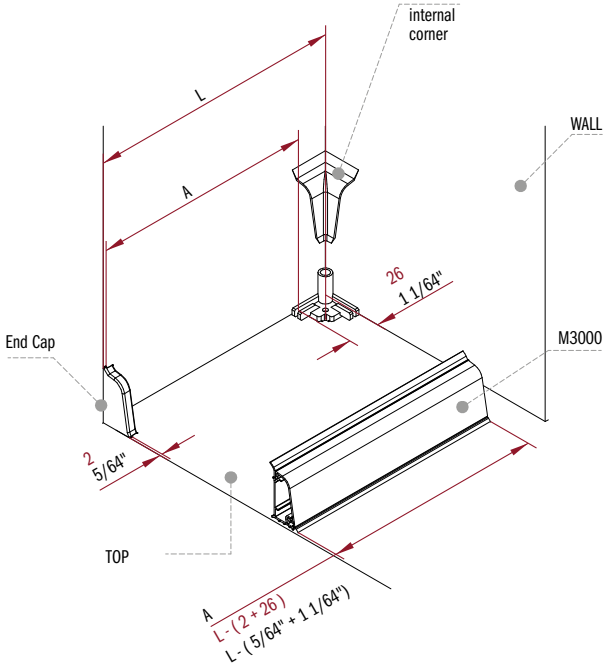
internal corner
L
A
WALL
26
1 1/64"
End Cap
M3000
2
5/64"
TOP
A
L - (2 + 26)
L - (5/64" + 1 1/64")

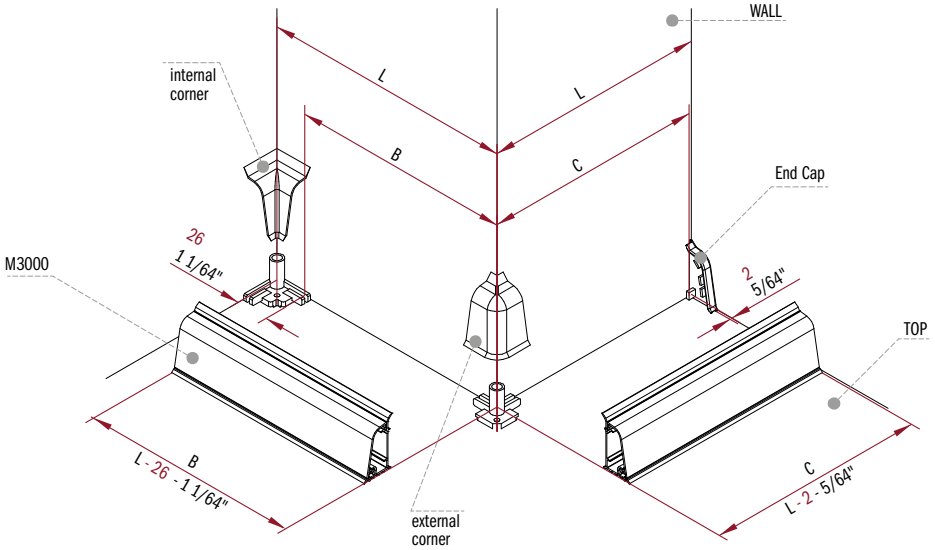
WALL
internal corner
L
L
B
C
End Cap
26
1 1/64"
M3000
2
5/64"
TOP
B
L - 26 - 1 1/64"
C
L - 2 - 5/64"
external corner

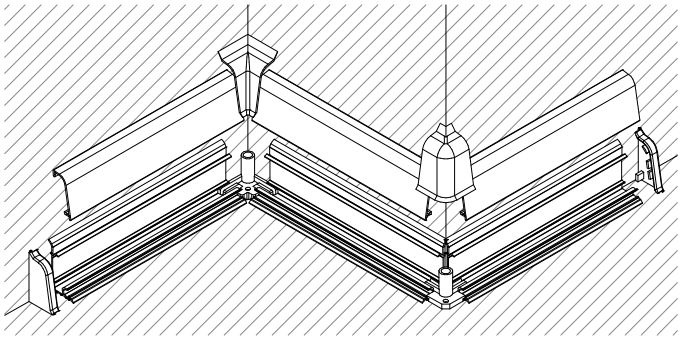

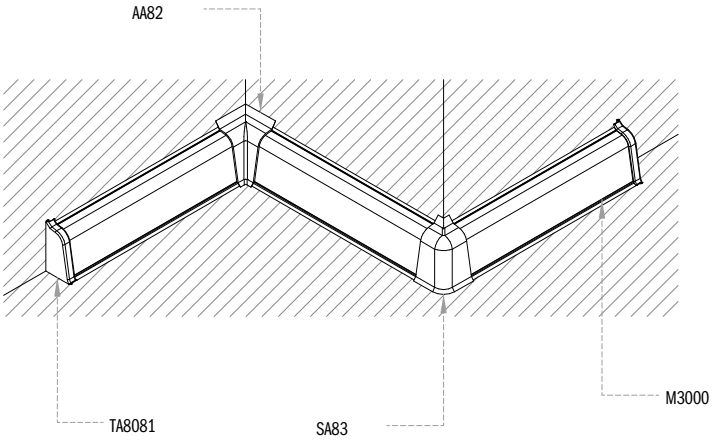
AA82
M3000
TA8081
SA83

M3000

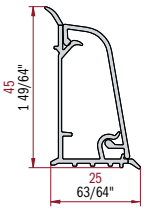

CURVED BACKSPLASH MOLDINGS PROFILE COMPOSED BY A PLASTIC CO-EXTRUDED SUPPORT PROFILE AND AN AESTHETIC PLAIN ALUMINIUM PROFILE.
To be used on countertops to cover the gap between the wall and the countertop and to provide a smooth junction. Can be used also as baseboard on the floor and as fairlead. High damp and heat resistance.

PROFIL DE DOSSERET INURVÉ COMPOSÉ D'UN PROFIL EN PLASTIQUE COEXTRUDÉ ET D'UN PROFIL ESTHÉTIQUE EN ALUMINIUM LISSE. Utilisé pour couvrir les espaces entre la surface de travail et le mur et pour créer une conjonction douce. Il peut également être utilisé comme plinthe au sol et comme filoir. Résistance élevée à la chaleur et à l'humidité.

PERFIL DE COPETE CURVO PARA TOP QUE CONSISTE EN UN PERFIL DE PLÁSTICO COEXTRUIDO Y UN PERFIL ESTÉTICO DE ALUMINIO LISO.
Se utiliza para cubrir los espacios entre la superficie de trabajo y la pared y para crear una conjunción suave. También se puede usar como zócalo en el piso y como guía. Alta resistencia al calor y a la humedad.

COLORS	ITEM NUMBER	LENGTH		PCS PER BOX	BOX DIMENSION		BOX WEIGHT		AVAILABLE FROM ITALY MSRP PRICING USD			
					mm	inch						
		mm	inch		W x D x H	W x D x H	KG	LB	METER	FOOT	EACH	BOX
50S	M300050S01000	4000	157 1/2"		<<<<< MINIMUM ORDER AND PACKAGING TO BE CONFIRMED >>>>>				9.782	2.982	39.128	

TA8081

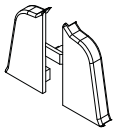

End cap right + end cap left

Paire d'embouts droit + gauche

Par terminal dcho./izdo. de plástico

COLORS	ITEM NUMBER	LENGTH		PCS PER BOX	BOX DIMENSION		BOX WEIGHT		AVAILABLE FROM ITALY MSRP PRICING USD			
					mm	inch						
		mm	inch		W x D x H	W x D x H	KG	LB	METER	FOOT	PAIR	BOX
	TA8081DS07000				<<<<< MINIMUM ORDER AND PACKAGING TO BE CONFIRMED >>>>>						0.551	

AA82

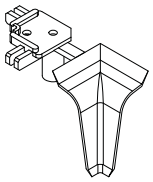

Angle 90°

90° internal corner

Ángulo interior 90° de plástico

COLORS	ITEM NUMBER	LENGTH		PCS PER BOX	BOX DIMENSION		BOX WEIGHT		AVAILABLE FROM ITALY MSRP PRICING USD			
					mm	inch						
		mm	inch		W x D x H	W x D x H	KG	LB	METER	FOOT	EACH	BOX
	AA82070000000				<<<<< MINIMUM ORDER AND PACKAGING TO BE CONFIRMED >>>>>						0.555	

SA83

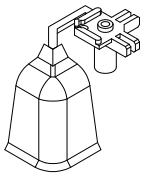

Arête 90°

90° external corner

Ángulo exterior 90° de plástico

COLORS	ITEM NUMBER	LENGTH		PCS PER BOX	BOX DIMENSION		BOX WEIGHT		AVAILABLE FROM ITALY MSRP PRICING USD			
					mm	inch						
		mm	inch		W x D x H	W x D x H	KG	LB	METER	FOOT	EACH	BOX
	SA83070000000				<<<<< MINIMUM ORDER AND PACKAGING TO BE CONFIRMED >>>>>						0.566	

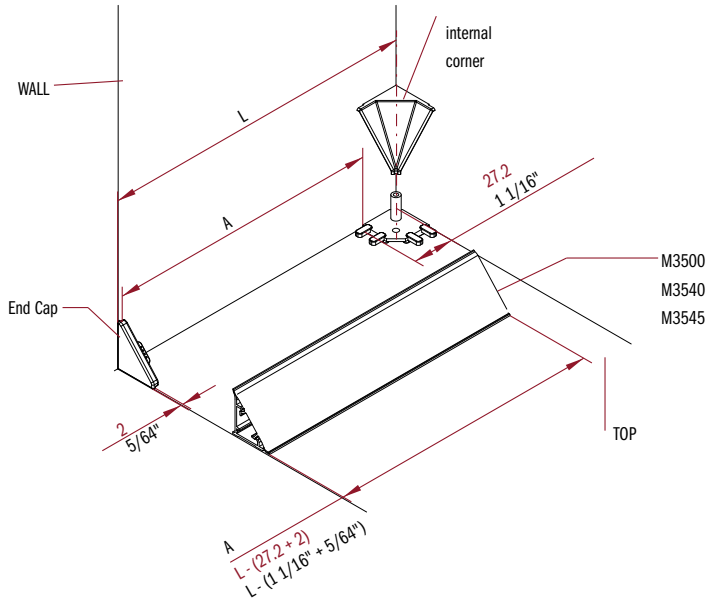
WALL
internal
corner
L
A
27.2
1 1/16"
M3500
M3540
M3545
End Cap
2
5/64"
TOP
A
L - (27.2 + 2)
L - (1 1/16" + 5/64")

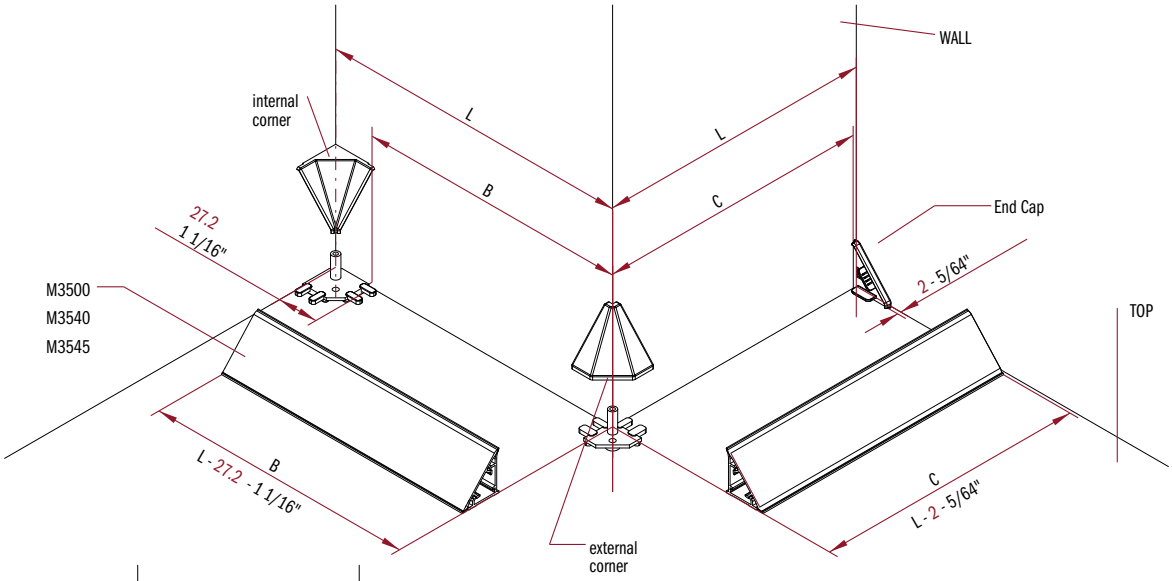
WALL
internal
corner
L
L
B
C
End Cap
27.2
1 1/16"
M3500
M3540
M3545
2 - 5/64"
TOP
B
L - 27.2 - 1 1/16"
C
L - 2 - 5/64"
external
corner

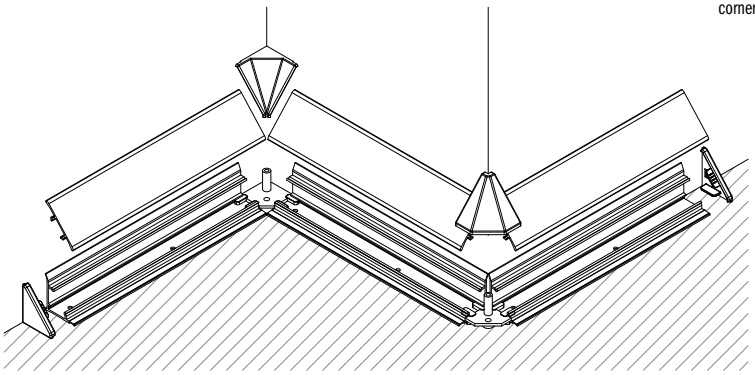

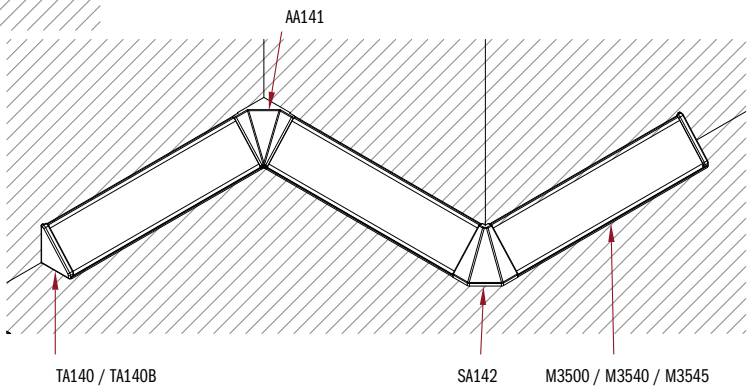
AA141
TA140 / TA140B
SA142
M3500 / M3540 / M3545

M3500

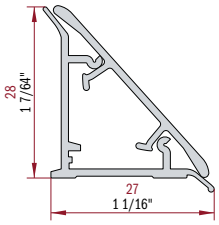

TRIANGULAR BACKSPLASH MOLDINGS PROFILE COMPOSED BY A PLASTIC CO-EXTRUDED SUPPORT PROFILE AND AN AESTHETIC PLAIN ALUMINIUM PROFILE.
To be used on countertops to cover the gap between the wall and the countertop and to provide a smooth junction. Can be used also as baseboard on the floor and as fairlead. High damp and heat resistance.

PROFIL DE DOSSERET TRIANGULAIRE COMPOSÉ D'UN PROFIL EN PLASTIQUE COEXTRUDÉ ET D'UN PROFIL ESTHÉTIQUE EN ALUMINIUM LISSE.
Utilisé pour couvrir les espaces entre la surface de travail et le mur et pour créer une conjonction douce. Il peut également être utilisé comme plinthe au sol et comme filoir. Résistance élevée à la chaleur et à l'humidité.

PERFIL DE COPETE TRIANGULAR PARA TOP QUE CONSISTE EN UN PERFIL DE PLÁSTICO COEXTRUIDO Y UN PERFIL ESTÉTICO DE ALUMINIO LISO.
Se utiliza para cubrir los espacios entre la superficie de trabajo y la pared y para crear una conjunción suave. También se puede usar como zócalo en el piso y como guía. Alta resistencia al calor y a la humedad.

COLORS	ITEM NUMBER	LENGTH		PCS PER BOX	BOX DIMENSION		BOX WEIGHT		AVAILABLE FROM ITALY MSRP PRICING USD			
					mm	inch						
		mm	inch		W x D x H	W x D x H	KG	LB	METER	FOOT	EACH	BOX
50S	M350050S01	4000	157 1/2"		<<<<< MINIMUM ORDER AND PACKAGING TO BE CONFIRMED >>>>>				7.519	2.292	30.076	

TA140

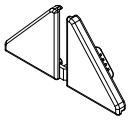

End cap right +end cap left

Paire d'embouts droit/gauche

Par terminales dcho./izdo. de plástico

COLORS	ITEM NUMBER	LENGTH		PCS PER BOX	BOX DIMENSION		BOX WEIGHT		AVAILABLE FROM ITALY MSRP PRICING USD			
					mm	inch						
		mm	inch		W x D x H	W x D x H	KG	LB	METER	FOOT	PAIR	BOX
	TA14013B				<<<<< MINIMUM ORDER AND PACKAGING TO BE CONFIRMED >>>>>						0.292	

AA141

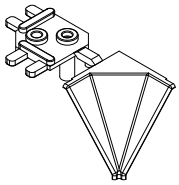

90° internal corner

Angle 90°

Ángulo interior 90° de plástico

COLORS	ITEM NUMBER	LENGTH		PCS PER BOX	BOX DIMENSION		BOX WEIGHT		AVAILABLE FROM ITALY MSRP PRICING USD			
					mm	inch						
		mm	inch		W x D x H	W x D x H	KG	LB	METER	FOOT	EACH	BOX
	AA14113B				<<<<< MINIMUM ORDER AND PACKAGING TO BE CONFIRMED >>>>>						0.537	

SA142

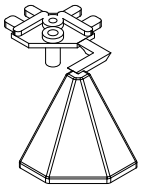

90° external corner

Arête 90°

Ángulo exterior 90° de plástico

COLORS	ITEM NUMBER	LENGTH		PCS PER BOX	BOX DIMENSION		BOX WEIGHT		AVAILABLE FROM ITALY MSRP PRICING USD			
					mm	inch						
		mm	inch		W x D x H	W x D x H	KG	LB	METER	FOOT	EACH	BOX
	SA14213B				<<<<< MINIMUM ORDER AND PACKAGING TO BE CONFIRMED >>>>>						0.528	

M3540

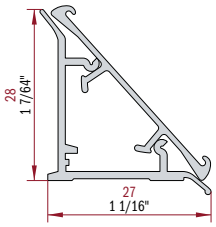

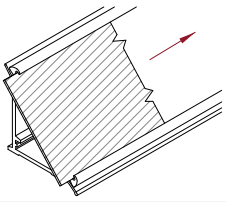

TRIANGULAR BACKSPLASH MOLDINGS PROFILE COMPOSED BY A PLASTIC CO-EXTRUDED SUPPORT PROFILE AND AN ALUMINUM PROFILE TO BE FINISHED WITH A STRIP OF THE SAME LAMINATE OF THE COUNTERTOP.
To be used on countertops to cover the gap between the wall and the countertop and to provide a smooth junction.
Can be used also as baseboard on the floor and as fairlead.
High damp and heat resistance.

PROFIL DE DOSSERET TRIANGULAIRE COMPOSÉ D'UN PROFIL EN PLASTIQUE COEXTRUDÉ ET D'UN PROFIL EN ALUMINIUM À FINIR PAR UNE BANDE DE STRATIFIÉ SELON LA DÉCORATION DE LA SURFACE DE TRAVAIL.
Utilisé pour couvrir les espaces entre la surface de travail et le mur et pour créer une conjonction douce.
Il peut également être utilisé comme plinthe au sol et comme filoir.
Résistance élevée à la chaleur et à l'humidité.

PERFIL DE COPETE TRIANGULAR PARA TOP QUE CONSISTE EN UN PERFIL DE PLÁSTICO COEXTRUIDO Y UN PERFIL DE ALUMINIO PARA ACABAR CON UNA TIRA DE LAMINADO DE ACUERDO CON LA DECORACIÓN DE LA SUPERFICIE DE TRABAJO.
Se utiliza para cubrir los espacios entre la superficie de trabajo y la pared y para crear una conjunción suave.
También se puede usar como zócalo en el piso y como guía.
Alta resistencia al calor y a la humedad.

COLORS	ITEM NUMBER	LENGTH mm	LENGTH inch	PCS PER BOX	BOX DIMENSION mm W x D x H	BOX DIMENSION inch W x D x H	BOX WEIGHT KG	BOX WEIGHT LB	AVAILABLE FROM ITALY MSRP PRICING USD METER	FOOT	EACH	BOX
50S	M354050S01	4000	157 1/2"	<<<<< MINIMUM ORDER AND PACKAGING TO BE CONFIRMED >>>>>					8.325	2.537	33.300	

M3545

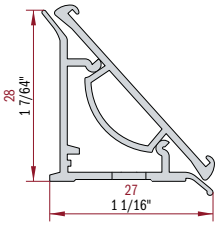

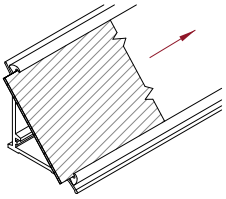

TRIANGULAR BACKSPLASH MOLDINGS PROFILE COMPOSED BY A PLASTIC CO-EXTRUDED SUPPORT PROFILE AND A PLASTIC PROFILE TO BE FINISHED WITH A STRIP OF THE SAME LAMINATE OF THE COUNTERTOP.
To be used on countertops to cover the gap between the wall and the countertop and to provide a smooth junction.
Can be used also as baseboard on the floor and as fairlead.
High damp and heat resistance.

PROFIL DE DOSSERET TRIANGULAIRE COMPOSÉ D'UN PROFIL EN PLASTIQUE COEXTRUDÉ ET D'UN PROFIL EN PLASTIQUE À FINIR PAR UNE BANDE DE STRATIFIÉ SELON LA DÉCORATION DE LA SURFACE DE TRAVAIL.
Utilisé pour couvrir les espaces entre la surface de travail et le mur et pour créer une conjonction douce.
Il peut également être utilisé comme plinthe au sol et comme filoir.
Résistance élevée à la chaleur et à l'humidité.

PERFIL DE COPETE TRIANGULAR PARA TOP QUE CONSISTE EN UN PERFIL DE PLÁSTICO COEXTRUIDO Y UN PERFIL DE PLÁSTICO PARA ACABAR CON UNA TIRA DE LAMINADO DE ACUERDO CON LA DECORACIÓN DE LA SUPERFICIE DE TRABAJO.
Se utiliza para cubrir los espacios entre la superficie de trabajo y la pared y para crear una conjunción suave.
También se puede usar como zócalo en el piso y como guía.
Alta resistencia al calor y a la humedad.

COLORS	ITEM NUMBER	LENGTH mm	LENGTH inch	PCS PER BOX	BOX DIMENSION mm W x D x H	BOX DIMENSION inch W x D x H	BOX WEIGHT KG	BOX WEIGHT LB	AVAILABLE FROM ITALY MSRP PRICING USD METER	FOOT	EACH	BOX
50S	M3545-01-01	4000	157 1/2"	<<<<< MINIMUM ORDER AND PACKAGING TO BE CONFIRMED >>>>>					7.203	2.195	28.812	

TA140B

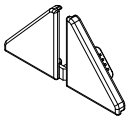

End cap right +end cap left

Paire d'embouts droit/gauche

Par terminales dcho./izdo. de plástico

COLORS	ITEM NUMBER	LENGTH mm	LENGTH inch	PCS PER BOX	BOX DIMENSION mm W x D x H	BOX DIMENSION inch W x D x H	BOX WEIGHT KG	BOX WEIGHT LB	AVAILABLE FROM ITALY MSRP PRICING USD METER	FOOT	PAIR	BOX
	TA140B13			<<<<< MINIMUM ORDER AND PACKAGING TO BE CONFIRMED >>>>>							0.291	

AA141

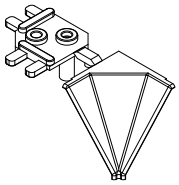

90° internal corner

Angle 90°

Ángulo interior 90° de plástico

COLORS	ITEM NUMBER	LENGTH mm	LENGTH inch	PCS PER BOX	BOX DIMENSION mm W x D x H	BOX DIMENSION inch W x D x H	BOX WEIGHT KG	BOX WEIGHT LB	AVAILABLE FROM ITALY MSRP PRICING USD METER	FOOT	EACH	BOX
	AA14113B			<<<<< MINIMUM ORDER AND PACKAGING TO BE CONFIRMED >>>>>							0.537	

SA142

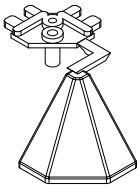

90° external corner

Arête 90°

Ángulo exterior 90° de plástico

COLORS	ITEM NUMBER	LENGTH mm	LENGTH inch	PCS PER BOX	BOX DIMENSION mm W x D x H	BOX DIMENSION inch W x D x H	BOX WEIGHT KG	BOX WEIGHT LB	AVAILABLE FROM ITALY MSRP PRICING USD METER	FOOT	EACH	BOX
	SA14213B			<<<<< MINIMUM ORDER AND PACKAGING TO BE CONFIRMED >>>>>							0.528	

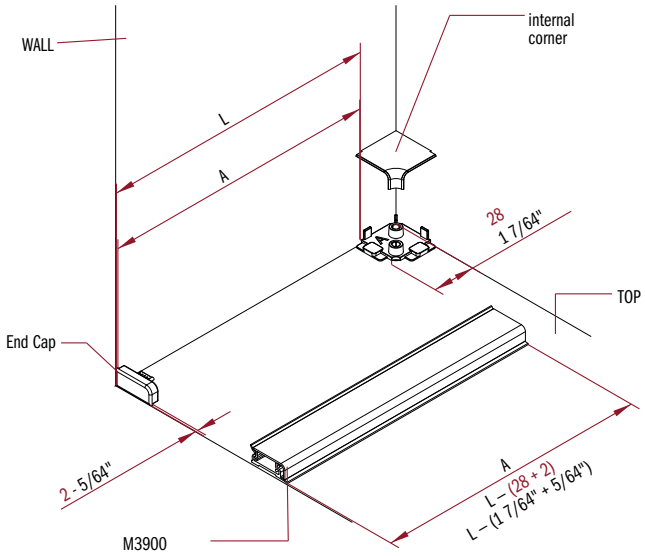
WALL
internal corner
L
A
28
1 7/64"
TOP
End Cap
2 - 5/64"
A
L – (28 + 2)
L – (1 7/64" + 5/64")
M3900

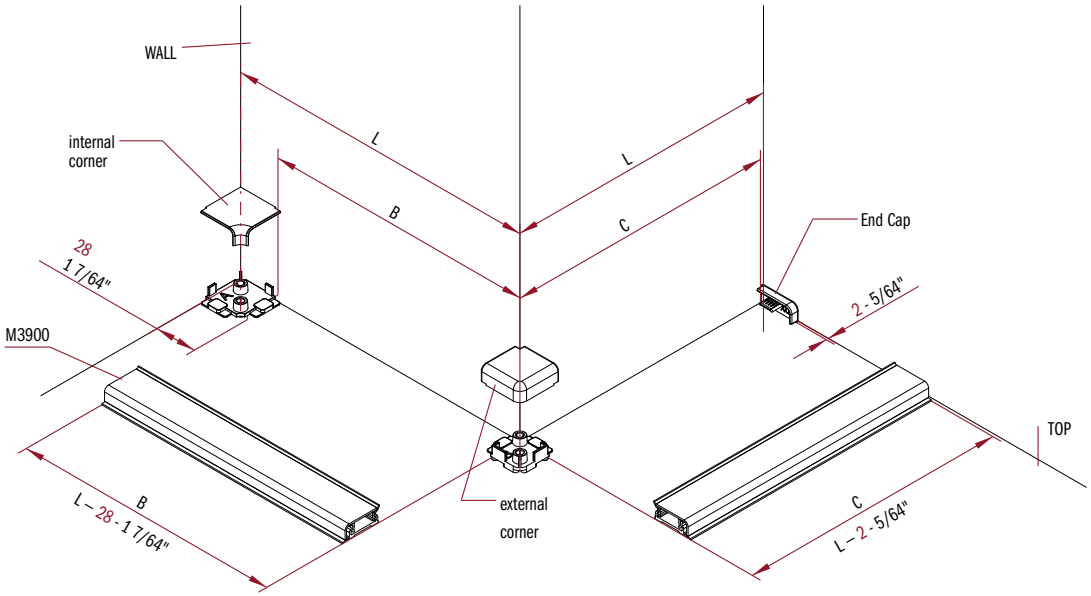
WALL
internal corner
L
L
B
C
End Cap
28
1 7/64"
2 - 5/64"
M3900
TOP
B
L – 28 - 1 7/64"
external corner
C
L – 2 - 5/64"

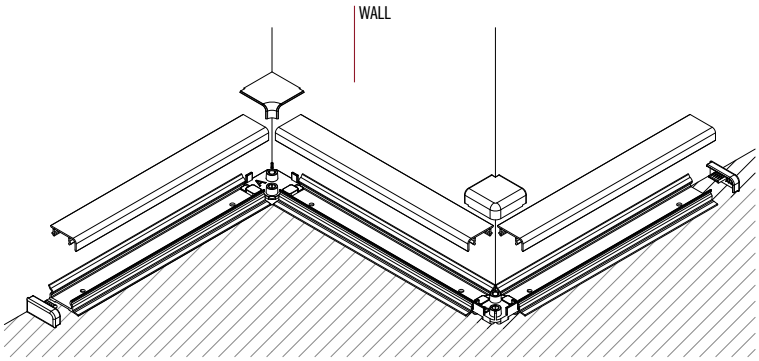
WALL

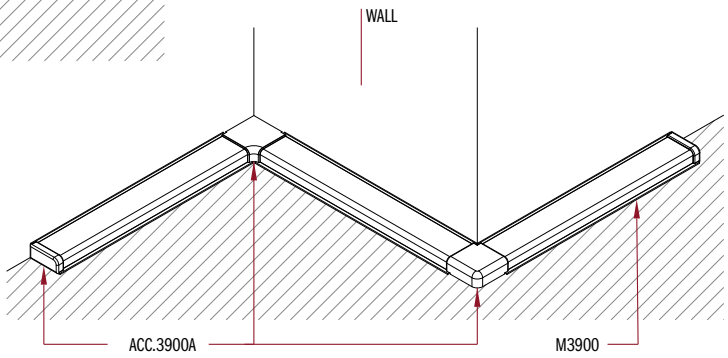
WALL
ACC.3900A
M3900

M3900

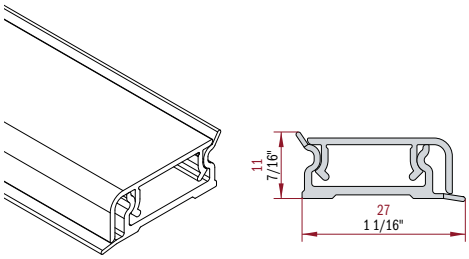

RECTANGULAR BACKSPLASH MOLDINGS PROFILE COMPOSED BY A PLASTIC CO-EXTRUDED SUPPORT PROFILE AND AN AESTHETIC PLAIN ALUMINIUM PROFILE.
To be used on countertops to cover the gap between the wall and the countertop and to provide a smooth junction. Can be used also as baseboard on the floor and as fairlead.
High damp and heat resistance

PROFIL DE DOSSERET RECTANGULAIRE COMPOSÉ D'UN PROFIL EN PLASTIQUE COEXTRUDÉ ET D'UN PROFIL ESTHÉTIQUE EN ALUMINIUM LISSE.
Utilisé pour couvrir les espaces entre la surface de travail et le mur et pour créer une conjonction douce. Il peut également être utilisé comme plinthe au sol et comme filoir.
Résistance élevée à la chaleur et à l'humidité.

PERFIL DE COPETE RECTANGULAR PARA TOP QUE CONSISTE EN UN PERFIL DE PLÁSTICO COEXTRUIDO Y UN PERFIL ESTÉTICO DE ALUMINIO LISO.
Se utiliza para cubrir los espacios entre la superficie de trabajo y la pared y para crear una conjunción suave. También se puede usar como zócalo en el piso y como guía. Alta resistencia al calor y a la humedad.

COLORS	ITEM NUMBER	LENGTH		PCS PER BOX	BOX DIMENSION		BOX WEIGHT		AVAILABLE FROM ITALY MSRP PRICING USD			
					mm	inch						
		mm	inch		W x D x H	W x D x H	KG	LB	METER	FOOT	EACH	BOX
50S	M390050S01	4000	157 1/2"		<<<<< MINIMUM ORDER AND PACKAGING TO BE CONFIRMED >>>>>				7.565	2.306	30.260	

ACC 3900A

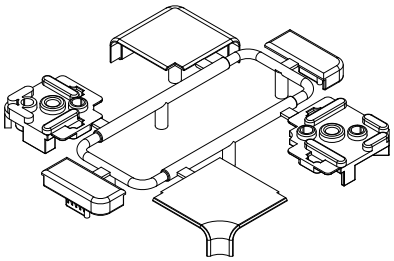

Set:
nr. 2 corners 90° (1 int. + 1 ex.)
nr. 2 endcaps (1 rh + 1 lh)

Kit :
1 angle 90°
1 arête 90°
2 embouts (1 droit + 1 gauche)

Kit:
núm. 1 ángulo 90°
núm. 1 canto 90°
núm. 2 terminales (1 dcho + 1 izdo)

COLORS	ITEM NUMBER	LENGTH		KIT PER BOX	BOX DIMENSION		BOX WEIGHT		AVAILABLE FROM ITALY MSRP PRICING USD			
					mm	inch						
		mm	inch		W x D x H	W x D x H	KG	LB	METER	FOOT	KIT	BOX
	ACC.3900A-13				<<<<< MINIMUM ORDER AND PACKAGING TO BE CONFIRMED >>>>>						1.001	

WE MAKE THE DIFFERENCE IN THE KITCHEN

DRIP PANS

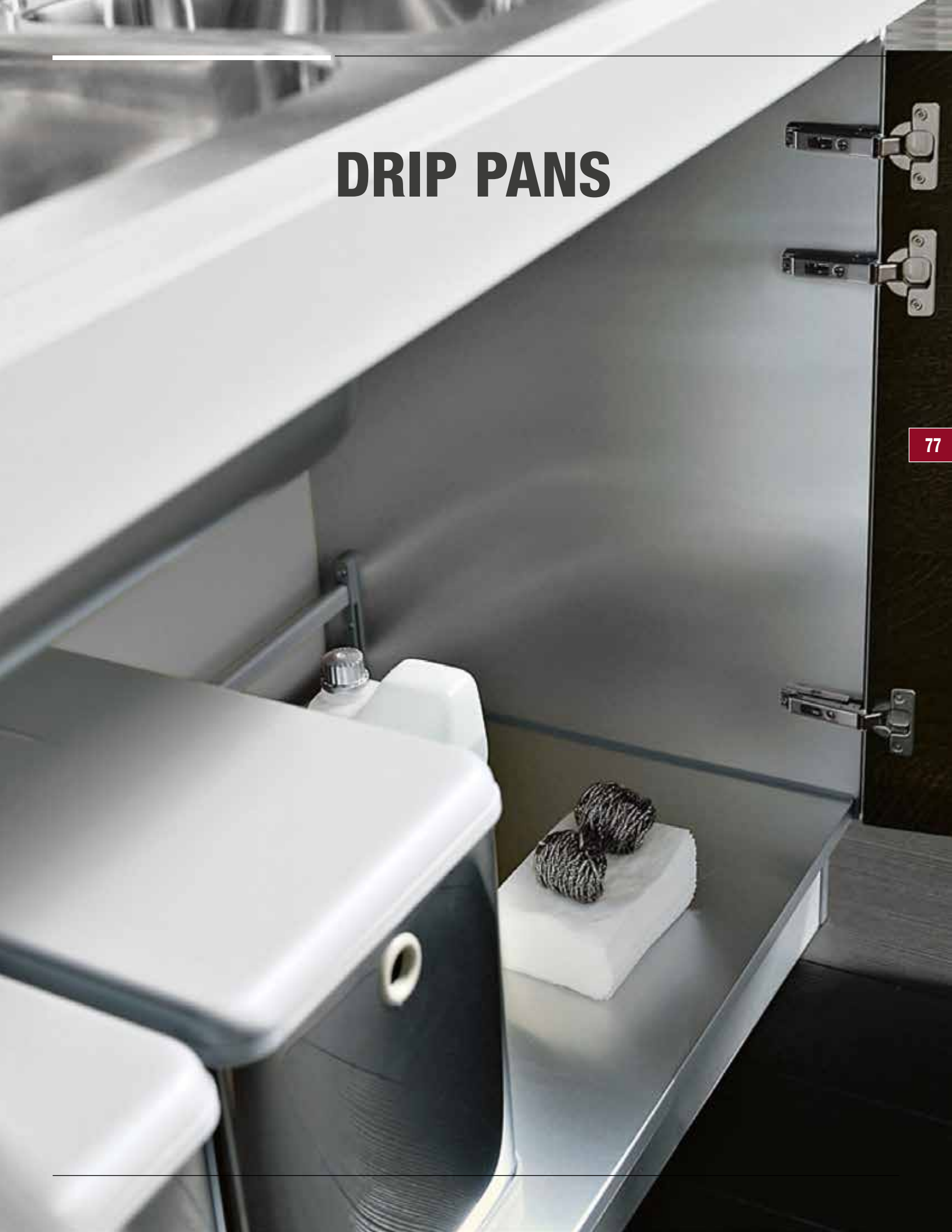

DRIP PANS

PROTECTION POUR LE MEUBLE SOUS-ÉVIER

PROTECCIÓN PARA EL MUEBLE DE FREGADERO

Why...
It's an efficient way to protect the most vulnerable cabinet in the kitchen.

- Quick to install, no tools required
- Cabinet protection against water and dirt
- Easy to clean, durable and water resistant
- Adjustable size to fit your cabinet

Pourquoi...
C'est un moyen efficace de protéger l'armoire le plus vulnérables dans la cuisine.

- *Rapide à installer, aucun outils nécessaire*
- *Protection de l'armoire contre l'eau et la saleté*
- *Facile à nettoyer, durable et Résistant à l'eau*
- *Taille adjustable pour s'adapter à votre armoire*

Por qué...
es una eficiente foma de proteger la parte masvulnerable de un mueble...

- Rápido de instalar, sin necesidad de herramientas
- Protección del gabinete contra el agua y la suciedad
- Fácil de limpiar, resistentes y resistente al agua
- Talla ajustable para adaptarse a su gabinete

Technical Specifications...
- Material: Aluminum or PVC
- Performance: Anti-Scratch and Anti-Stain surface processing
- Environment: 100% recyclable material

Spécifications Techniques...
- *Matériel: Aluminium ou PVC*
- *Performance: Traitement de surface Anti-Rayures et Anti-Taches*
- *Environnement: Matériaux 100% recyclables*

Especificaciones Técnicas...
- Material: Aluminio o PVC
- Rendimiento: Tratamiento de superficies Anti-Arañazos y Anti-Mancha
- Medio Ambiente: Materiales 100% reciclables

DRIP PANS

PROTECTION POUR LE MEUBLE SOUS-ÉVIER

PROTECCIÓN PARA EL MUEBLE DE FREGADERO

930G (GASKETS INCLUDED)

PLASTIC "DRIP PAN" PROTECTOR FOR BASE CABINET
Thermoplastic protection for sink cabinets with mm 580 maximum depth and removable rubber edges.

PROTECTEUR EN PLASTIQUE POUR BAS D'ARMOIRE
Protection sous évier en matériau thermoplastique, profondeur maximale mm 580.
Avec bords latérales en caoutchouc et amovibles.

BASE PROTECTORA EN MATERIAL PLASTICO PARA BASE DE MUEBLE
Protección para el fondo del mueble fregadero en material termoplástico con profundidad maxima 580 mm y con bordes laterales extraíbles de goma.

ITEM NUMBER	NOMINAL CABINET SIZE	Exterior Cabinet width 16mm gables		Exterior Cabinet width 19mm gables		Interior Cabinet width		Interior Cabinet depth		PCS PER BOX	BOX DIMENSION W x D x H	BOX DIMENSION W x D x H	BOX WEIGHT		FOB SCILM AMERICA MSRP USD PRICING	
		mm	inch	mm	inch	mm	inch	mm	inch		mm	inch	KG	LB	EACH	BOX
V930/0590/1G/T	24"	622	24 31/64"	628	24 23/32"	590	23 7/32"	585	23 1/32"	20	600 x 200 x 600	23 5/8" x 7 7/8" x 23 5/8"	8.90	19.62	21.960	439.200
V930/0890/1G/T	36"	922	36 19/64"	928	36 17/32"	890	35 1/32"	585	23 1/32"	20	900 x 200 x 600	35 3/8" x 7 7/8" x 23 5/8"	13.60	29.98	27.276	545.520
V930/1190/1G/T	48"	1222	48 7/64"	1228	48 11/32"	1190	46 55/64"	585	23 1/32"	20	1200 x 200 x 600	47 1/4" x 7 7/8" x 23 5/8"	17.90	39.46	33.850	677.000

VF930

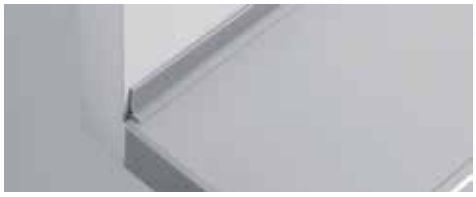

REPLACEMENT GASKET FOR "DRIP PAN" PROTECTOR FOR BASE CABINET

JOINT D'ÉTANCHÉITÉ DE REMPLACEMENT POUR PROTECTEUR DE BAS D'ARMOIRE

GUARNICION DE PROTECCION PARA MUEBLE BAJO

ITEM NUMBER	PCS PER BOX	BOX DIMENSION mm W x D x H	BOX DIMENSION inch W x D x H	BOX WEIGHT KG	BOX WEIGHT LB	STOCK IN AMERICA MSRP PRICING USD EACH	STOCK IN AMERICA MSRP PRICING USD BOX
VF/930/1750	40	1830 x 80 x 70	72" x 3 1/8" x 2 3/4"	1.20	2.65	5.081	203.240

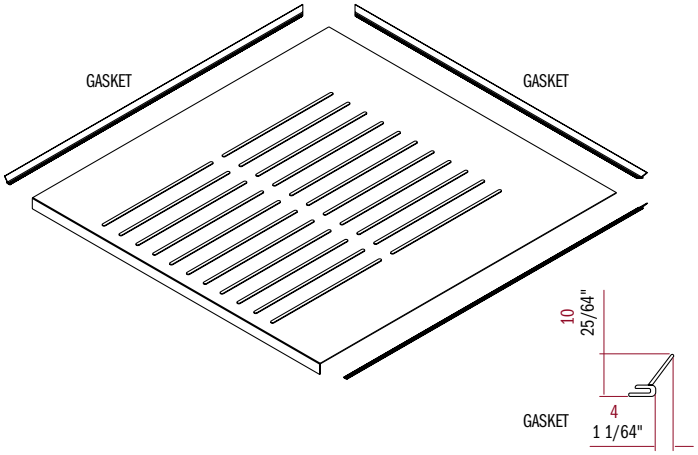

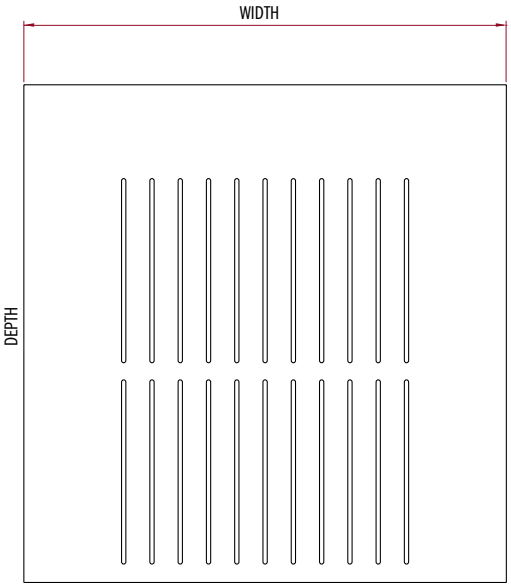

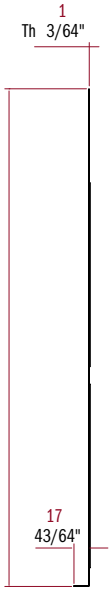

920

ORGANIZER
Adaptable under-sink organizer for efficient space-saving storage, to be used with the Thermoplastic protection for sink cabinets model 930/G.

CONTENEUR DE STOCKAGE
Conteneur de stockage en matériau thermoplastique adaptable à la protection pour fond évier mod. 930/G.

CONTENEDOR
Contenedor de material termoplástico adaptable para la protección para el fondo del mueble fregadero mod. 930/G.

COLORS	ITEM NUMBER	PCS PER BOX	BOX DIMENSION mm W x D x H	BOX DIMENSION inch W x D x H	BOX WEIGHT KG	BOX WEIGHT LB	STOCK IN AMERICA MSRP PRICING USD EACH	STOCK IN AMERICA MSRP PRICING USD BOX
	V920/T	20	600 x 390 x 600	23 5/8" x 15 3/8" x 23 5/8"	4.00	8.82	14.761	295.220

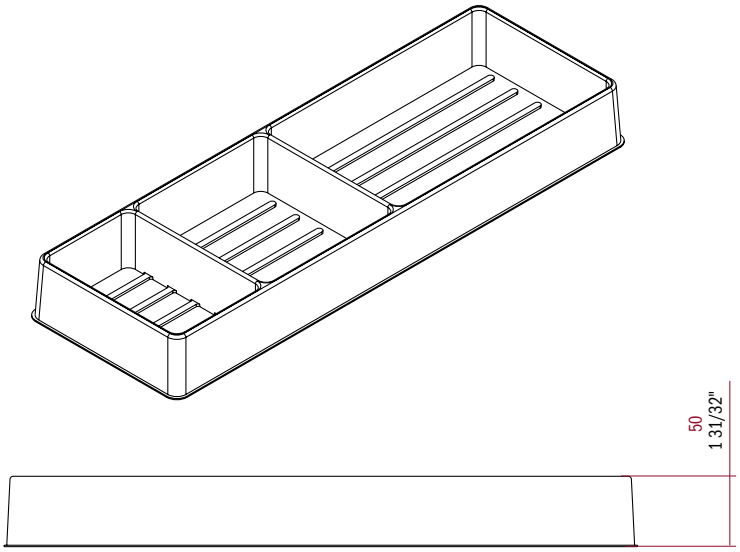

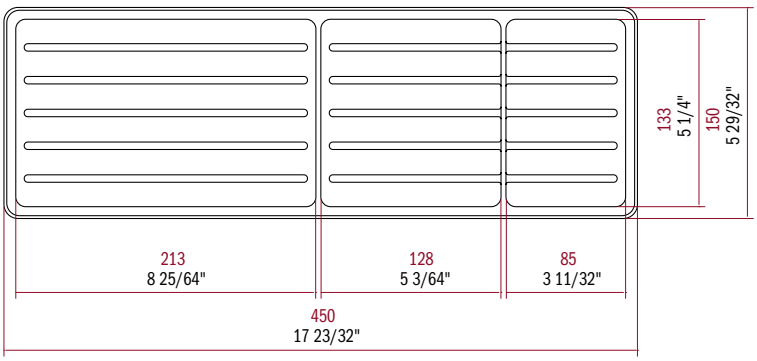

753LY (GASKETS INCLUDED)

ALUMINUM "DRIP PAN" PROTECTOR FOR BASE CABINET
Other Sizes Available FROM ITALY

PROTECTEUR EN ALUMINIUM POUR BAS D'ARMOIRE
Autres Dimensions Disponibles DE L'ITALIE

BASE PROTECTORA EN ALUMINIO PARA BASE DE MUEBLE
Otros Dimensiones Disonibles DE ITALIA

ITEM NUMBER	Panel Thickness		Exterior Cabinet		Interior Cabinet width		Interior Cabinet depth		PCS PER BOX	BOX DIMENSION W x D x H	BOX DIMENSION W x D x H	BOX WEIGHT		FOB SCILM AMERICA MSRP USD PRICING	
753LY	mm	inch	mm	inch	mm	inch	mm	inch		mm	inch	KG	LB	EACH	BOX
U753LY890-22	16	5/8"	914	36"	882	34 3/4"	584	23"	20	900 x 240 x 710	35 3/8" x 9 1/2" x 28"	14.50	31.97	31.417	628.340
U753LY8105-22	16	5/8"	1067	42"	1035	40 3/4"	584	23"	20	1200 x 240 x 710	47 1/4" x 9 1/2" x 28"	17.00	37.48	34.435	688.700
U753LY8120-22	16	5/8"	1219	48"	1187	46 3/4"	584	23"	20	1200 x 240 x 710	47 1/4" x 9 1/2" x 28"	19.00	41.89	36.956	739.120
U753LY990-22	19	3/4"	914	36"	876	34 1/2"	584	23"	20	900 x 240 x 710	35 3/8" x 9 1/2" x 28"	14.50	31.97	36.293	725.860
U753LY9105-22	19	3/4"	1067	42"	1029	40 1/2"	584	23"	20	1200 x 240 x 710	47 1/4" x 9 1/2" x 28"	17.00	37.48	39.737	794.740
U753LY9120-22	19	3/4"	1219	48"	1181	46 1/2"	584	23"	20	1200 x 240 x 710	47 1/4" x 9 1/2" x 28"	19.00	41.89	39.737	794.740

GU750L 22 (ADDITIONAL GASKET FOR REPLACEMENT ONLY)

REPLACEMENT GASKET FOR "DRIP PAN" PROTECTOR FOR BASE CABINET

JOINT D'ÉTANCHÉITÉ DE REMPLACEMENT POUR PROTECTEUR DE BAS D'ARMOIRE

GUARNICION DE PROTECCION PARA MUEBLE BAJO

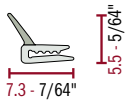

ITEM NUMBER	LENGTH		PCS PER BOX	BOX DIMENSION mm W x D x H	BOX DIMENSION inch W x D x H	BOX WEIGHT		STOCK IN AMERICA MSRP PRICING USD			
	mm	inch				KG	LB	METER	FOOT	EACH	BOX
UGU750L-22.02	1330	52 3/8"	40	1500 x 95 x 65	59" x 3 3/4" x 2 1/2"	2.50	5.51	4.019	1.225	5.345	213.811

WE MAKE THE DIFFERENCE IN THE KITCHEN

CATENARIA PROFILES

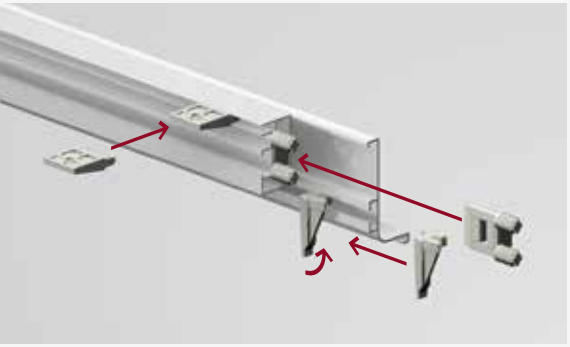

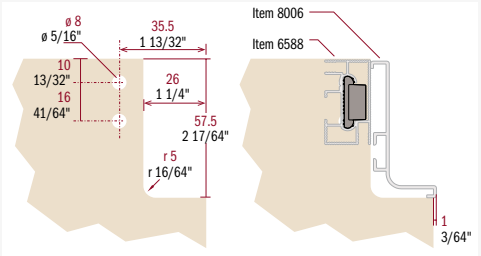

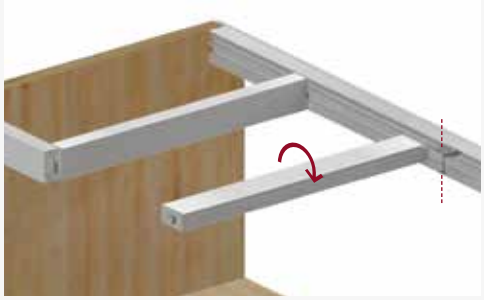

Why...

It's an effective, practical and economical way to build not only the sink cabinet, but all base cabinets.

- Complete system for the construction of the cabinets;
- Quick to install
- Economical: no need for backs, roofs or edge banded stretchers or rails
- Cabinets built with aluminum cross bars are extremely durable, strong and provide easier and safer to handle as well as giving a modern flair
- Easy to manage: bars are to be cut to size and plastic accessories are designed to complete the assembly
- Options: the accessory 6588TP01 provides reinforced cross structure for stronger support
- Options: the accessory CSP0149-01SF allows a direct interlock with gola profile mod. 8006 with no need for support SU106 or SU126
- Options: the accessory CSP0121-01SF provides fastening to the countertop

Pourquoi...

C'est un moyen efficace, pratique et économique de construire non seulement le meuble sous l'évier, mais toutes les armoires du bas.

- *Système complet pour la construction des armoires;*
- *Rapide à installer*
- *Economique: pas besoin de dos, dessus ou de traverse plaqué*
- *Les armoires construits avec des transverse en aluminium sont extrêmement durables, plus résistants, se manipule plus facilement en toute sécurité et donne une allure moderne*
- *Facile à gérer: les traverses sont couper à la dimension requis et les accessoires en plastique sont conçus pour compléter l'assemblage*
- *Options: l'accessoire 6588TP01 permet un renfort croisée pour une structure avec soutien accru*
- *Options: l'accessoire CSP0149-01SF permet l'attachement à la «GOLA 8006 - 8044"sans avoir le besoin d'utiliser le support SU106 ou SU126*
- *Options: l'accessoire CSP0121-01SF permet de fixer le plan de travail*

Por qué...

Es una manera eficaz, práctica y económica de construir no sólo el mueble del fregadero, pero todos los moulos bajos.

- Sistema completo para la construcción de los modulos
- Rápido de instalar
- Económico: no hay necesidad de que las partes posteriores, techos o laterales lleven mecanizaciones como fresados, canale etc
- Los modulos construidos con las barras transversales son de una extraordinaria durabilidad, son más fuerte y proporcionan un instalacion fácil y segura, dando asi un toque moderno, tecnico y elegante
- Fácil de montar, las barras deben ser cortados a medida y accesorios de plástico están diseñados para completar el montaje
- Opciones: 6588TP01 el accesorio proporciona una estructura reforzada en cruz para soportar un mayor apoyo
- Opciones: el accesorio CSP0149-01SF proporciona la union a la "GOLA 8006"sin necesidad de utilizar el soporte SU106 o SU126
- Opciones: el accesorio CSP0121-01SF proporciona fijación a la encimera

Technical Specifications...

Material: Aluminum and Plastic
Performance: Lined aluminum extrusion and highly resistant plastic injection accessories
Environment: 100% recyclable materials

Spécifications Techniques...

Matière: Aluminium et Plastique
Performance: extrusion d'aluminium lignée avec des accessoires très résistant en plastique injecté
Environnement: Matériau 100% recyclable

Especificaciones Técnicas...

Material: Aluminio
Rendimiento: extrusión de aluminio forrado y accesorios de plástico de alta resistencia de inyección
Medio ambiente: 100% reciclable

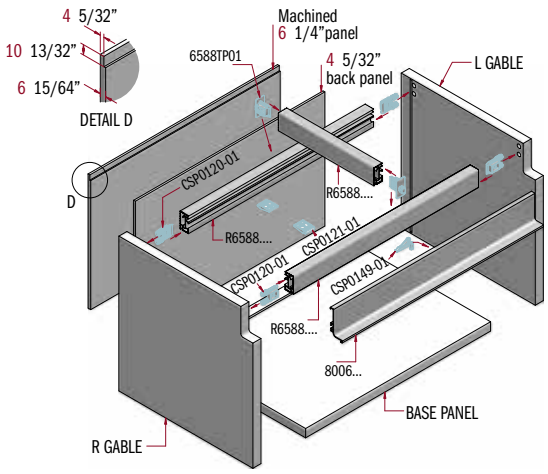
4 5/32"
10 13/32"
6 15/64"
DETAIL D
Machined
6 1/4"panel
6588TP01
4 5/32"
back panel
L GABLE
D
CSP0120-01
R6588....
R6588....
CSP0121-01
CSP0120-01
CSP0149-01
R6588....
8006...
BASE PANEL
R GABLE

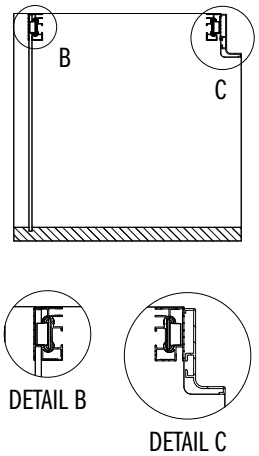
B
C
DETAIL B
DETAIL C

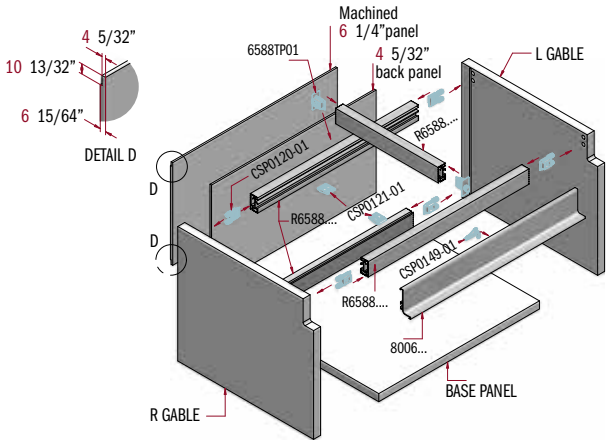
4 5/32"
10 13/32"
6 15/64"
DETAIL D
Machined
6 1/4"panel
6588TP01
4 5/32"
back panel
L GABLE
R6588....
D
CSP0120-01
R6588....
CSP0121-01
D
CSP0149-01
R6588....
8006...
BASE PANEL
R GABLE

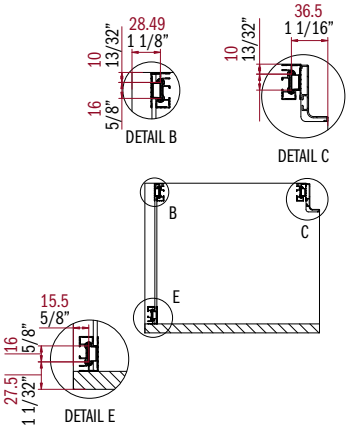
28.49
1 1/8"
10
13/32"
16
5/8"
DETAIL B
36.5
1 1/16"
10
13/32"
DETAIL C
B
C
E
15.5
5/8"
16
5/8"
27.5
1 1/32"
DETAIL E

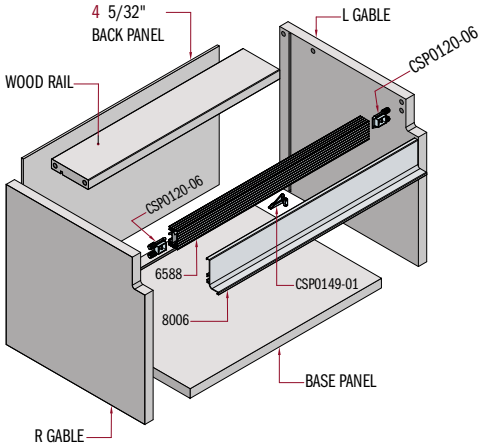
4 5/32"
BACK PANEL
L GABLE
CSP0120-06
WOOD RAIL
CSP0120-06
6588
CSP0149-01
8006
BASE PANEL
R GABLE

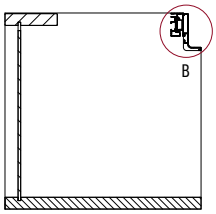
B

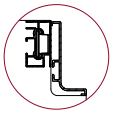
DETAIL B

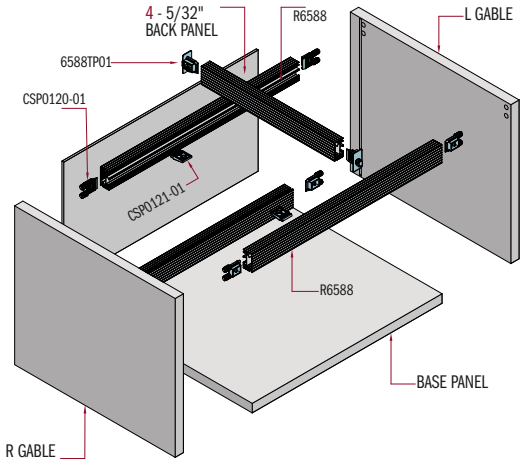
4 - 5/32"
BACK PANEL
R6588
L GABLE
6588TP01
CSP0120-01
CSP0121-01
R6588
BASE PANEL
R GABLE

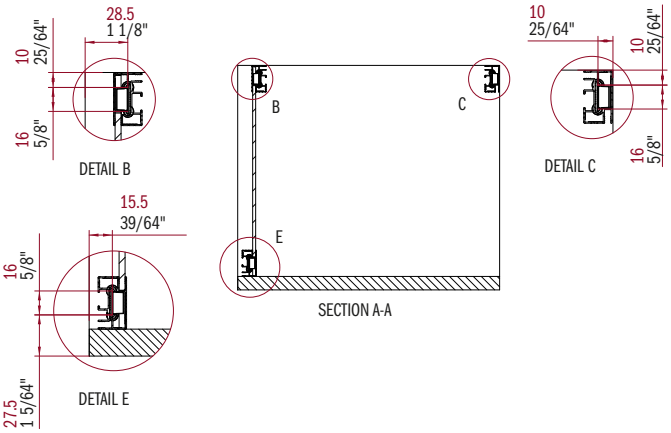
28.5
1 1/8"
10
25/64"
16
5/8"
DETAIL B
B
C
E
SECTION A-A
10
25/64"
10
25/64"
16
5/8"
DETAIL C
15.5
39/64"
16
5/8"
27.5
1 5/64"
DETAIL E

6588

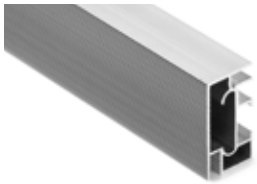

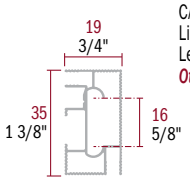

ALUMINUM CROSS BAR SYSTEM FOR BASE CABINET
Lined Anodized Aluminum
Length without dowels
Other Sizes Available FROM ITALY

SYSTÈME EN TRAVERSE EN ALUMINIUM POUR ARMOIRE DU BAS
Aluminium ligné anodisé
Longueur sans chevilles
Autres Dimensions Disponibles DE L'ITALIE

SISTEMA DE BARRA TRANSVERSAL PARA GABINETE BASE
Aluminio Rayado
Medida sin tapas
Otros Dimensiones Disonibles DE ITALIA

ITEM NUMBER	LENGTH		PCS PER BOX	BOX DIMENSION		BOX WEIGHT		STOCK IN AMERICA MSRP PRICING USD			
				mm	inch						
	mm	inch		W x D x H	W x D x H	KG	LB	METER	FOOT	EACH	BOX
UR6588L27	2650	104 5/16''	10	2720 x 125 x 95	107 1/8" x 4 7/8" x 3 3/4"	10.50	23.15	10.008	3.050	26.521	265.212

CSP0120

CLOSING END CAP WITH BUILT-IN DOWELS
Caps with built in dowels have to be pinned down

ENBOUT AVEC GOUJONS
Les embouts avec goujons intégrés doivent être épinglés

TAPA CON TARUGOS INCORPORADOS
Las tapas con tarrugos encorporatos tienen que ser punzonados

ITEM NUMBER	PCS PER BOX	BOX DIMENSION		BOX WEIGHT		STOCK IN AMERICA MSRP PRICING USD	
		mm	inch				
		W x D x H	W x D x H	KG	LB	EACH	BOX
UCSP0120-06SF	100	220 x 165 x 140	8 5/8" x 6 1/2" x 5 1/2"	0.50	1.10	0.918	91.800

CSP0121

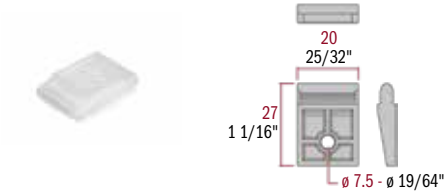

PLATE FOR COUNTERTOP FASTENING

PLAQUE DE FIXATION DE COMPTOIR

PLATINA PARA FIJACION DELTOPE O MOSTRADOR

ITEM NUMBER	PCS PER BOX	BOX DIMENSION		BOX WEIGHT		STOCK IN AMERICA MSRP PRICING USD	
		mm	inch				
		W x D x H	W x D x H	KG	LB	EACH	BOX
UCSP0121-01SF	100	220 x 165 x 140	8 5/8" x 6 1/2" x 5 1/2"	0.40	0.88	1.371	137.100

6588TP01

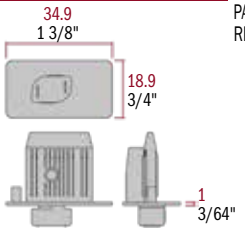

PAIR OF L/R INTERLOCKING END CAPS FOR REINFORCED STRUCTURES

PAIRE D'EMBOUTS DE VERROUILLAGE G/D POUR STRUCTURES RENFORCÉES

PAR DE TAPAS ENTRELAZANTES PARA PERFILES DE REFUERZO

ITEM NUMBER	PAIRS PER BOX	BOX DIMENSION		BOX WEIGHT		STOCK IN AMERICA MSRP PRICING USD	
		mm	inch				
		W x D x H	W x D x H	KG	LB	PAIR	BOX
U6588TP01	50	310 x 170 x 120	12 1/4" x 6 3/4" x 4 3/4"	0.50	1.10	2.025	101.250

CSP0149

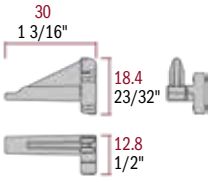

ATTACHMENT KEY FOR "GOLA" 8006 – 8021

CLÉ DE FIXATION POUR "GOLA" 8006 - 8021

LLAVE DE FIJACION PARA PERFIL "GOLA" 8006 - 8021

ITEM NUMBER	PCS PER BOX	BOX DIMENSION		BOX WEIGHT		STOCK IN AMERICA MSRP PRICING USD	
		mm	inch				
		W x D x H	W x D x H	KG	LB	EACH	BOX
UCSP0149-01SF	200	310 x 170 x 120	12 1/4" x 6 3/4" x 4 3/4"	0.50	1.10	1.239	247.800

6597

ALUMINUM CROSS BAR SYSTEM FOR BASE CABINET
Lined Aluminum
Other Sizes Available FROM ITALY

SISTEME EN TRAVERSE EN ALUMINIUM POUR ARMOIRE DU BAS
Aluminium Ligné
Autres Dimensions Disponibles DE L'ITALIE

SISTEMA DE BARRA TRANSVERSAL PARA GABINET BASE
Aluminio Rayado
Otros Dimensiones Disonibles DE ITALIA

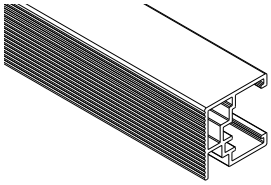

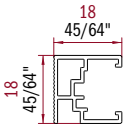

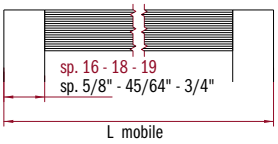

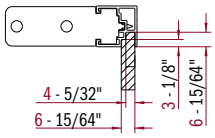

ITEM NUMBER	LENGTH		PCS PER BOX	BOX DIMENSION		BOX WEIGHT		STOCK IN AMERICA MSRP PRICING USD			
				mm	inch						
	mm	inch		W x D x H	W x D x H	KG	LB	METER	FOOT	EACH	BOX
U6597L27	2650	104 5/16''	10	2740 x 145 x 110	107 7/8" x 5 3/4" x 4 3/8"	6.50	14.33	5.968	1.819	15.815	158.152

KIT 6597TS

CLOSING END CAP (SCREWED) WITH SECURING SCREWS
R & L Caps (50 pairs) + Screws (110)

EMBOUT (VISSÉ) AVEC VIS DE FIXATION
Embouts D & G (50 paires) + Vis (110)

TAPA (PARA ÁTORNILLAR) CON TORNILLOS DE FIXATION
Set de 50 D&I Tapas + 110 Tornillos

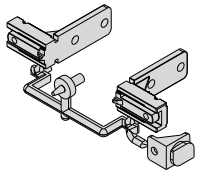

ITEM NUMBER	KIT PER BOX	BOX DIMENSION		BOX WEIGHT		STOCK IN AMERICA MSRP PRICING USD	
		mm	inch				
		W x D x H	W x D x H	KG	LB	KIT	BOX
UKIT.6597TS-A	1	460 x 170 x 120	18 1/8" x 6 3/4" x 4 3/4"	0.50	1.10	139.029	139.029

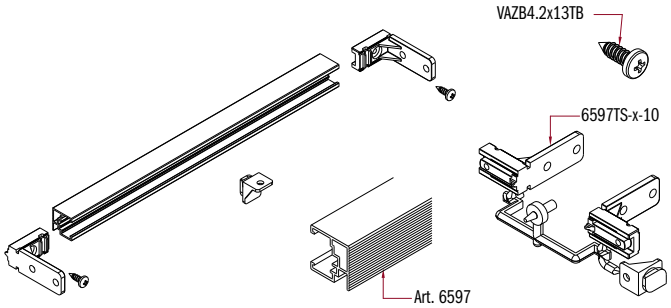

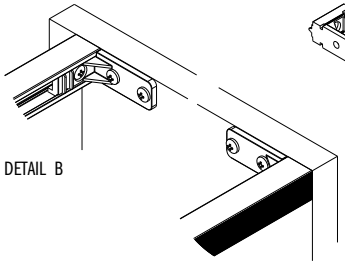

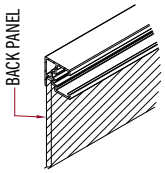

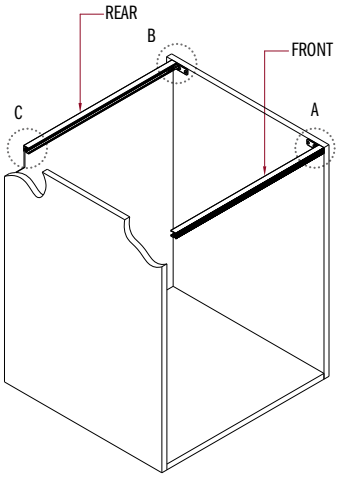

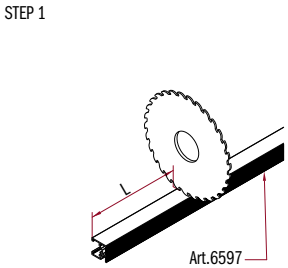

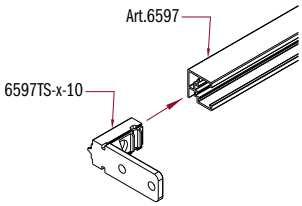

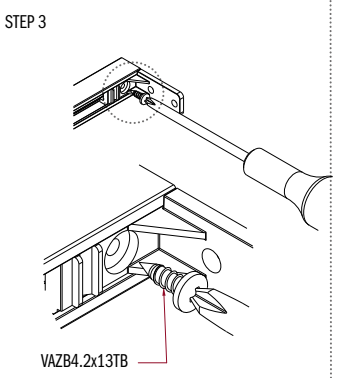

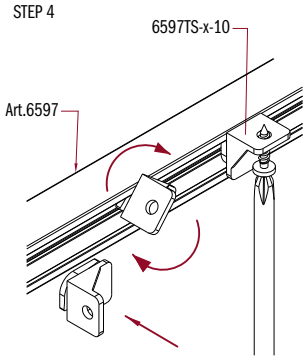

scilm AMERICA

È RICCA

DRAWER ACCESSORIES

918

LINERS
Non-sliding "smooth" fabric mat, thickness 1,2 mm.

TAPIS
Tapis antidérapant "lisse" textile, épaisseur 1,2 mm.

ALFOMBRAS
Alfombra antideslizamiento lisa tejido espesor 1,2 mm.

ITEM NUMBER	LENGTH		PCS PER BOX	BOX DIMENSION		BOX WEIGHT		STOCK IN AMERICA MSRP PRICING USD			
				mm	inch						
	METER	inch		W x D x H	W x D x H	KG	LB	METER	FOOT	EACH	BOX
V918/H/1450/GCH/12	10	393 11/16"	1	1500 170 x 170	59" x 6 3/4" x 6 3/4"	13.00	28.66	29.946	9.128	299.460	299.460
V918/H/1450/GAN/12	10	393 11/16"	1	1500 170 x 170	59" x 6 3/4" x 6 3/4"	13.00	28.66	29.946	9.128	299.460	299.460

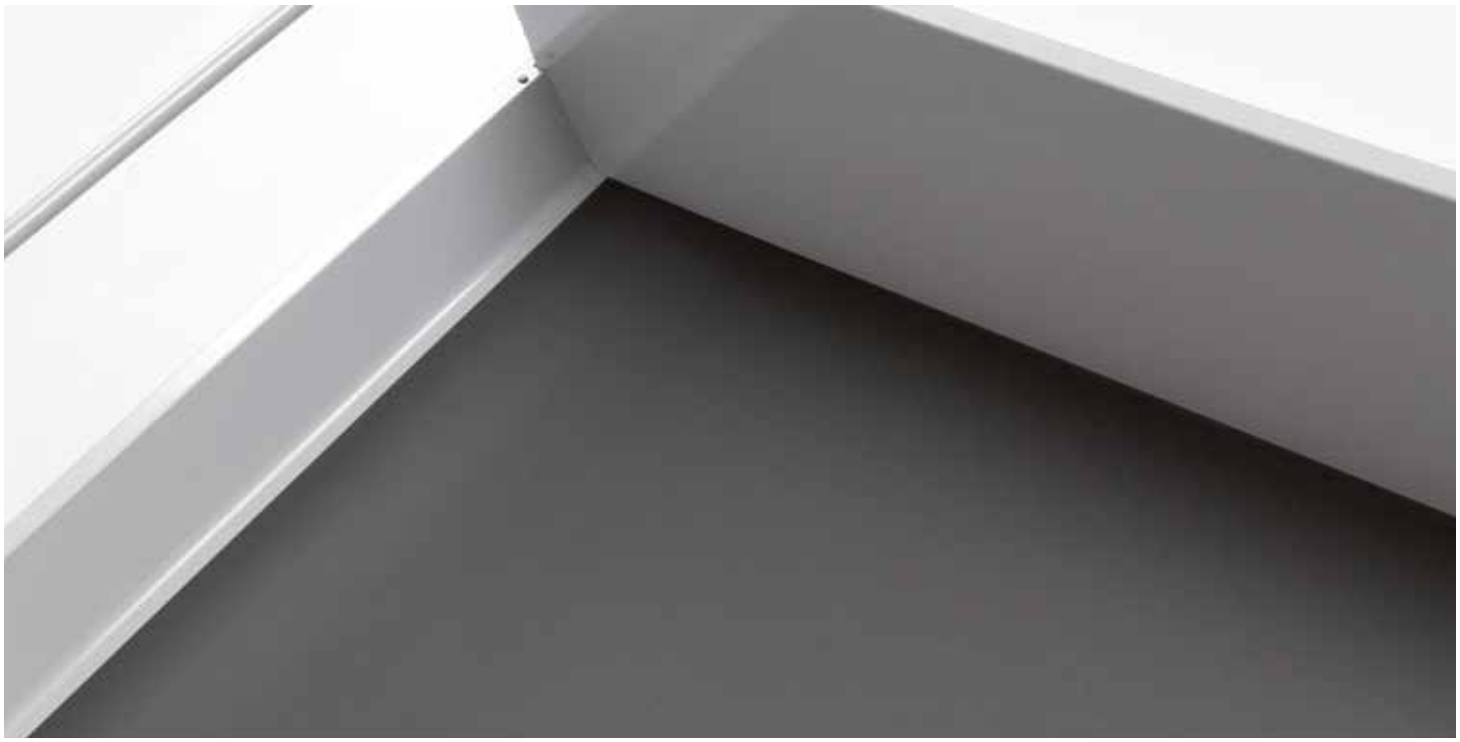

Light Gray (GCH)

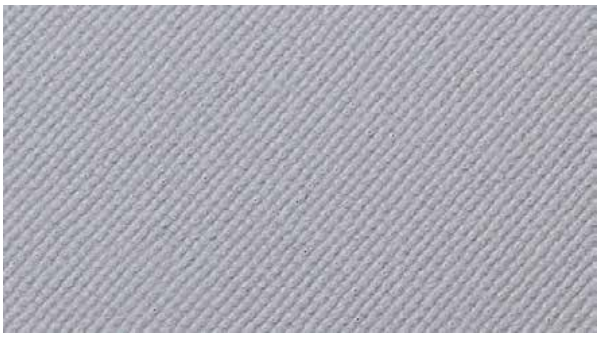

Dark Gray (GAN)

540

PATENT PENDING:
GE2014A000078

FRONTAL FIXING PLATE
Fast frontal fixing steel plate for support the drawer's base and to lock the front with the possibility to adjust it horizontally and vertically.

PLAQUE POUR FIXATION FRONTALE
Plaque en acier fixation frontale très rapide pour soutenir la base du tiroir et le blocage de la partie avant avec la possibilité de l'ajuster horizontalement et verticalement.

PLACA PARA FIJACION FRONTAL
Placa de acero con fijacíon rápida frontal para el sostén de la base del cajón y para bloquear el frontal con posibilidad de ajuste horizontal y vertical.

ITEM NUMBER	PAIRS PER BOX	BOX DIMENSION mm W x D x H	BOX DIMENSION inch W x D x H	BOX WEIGHT KG	BOX WEIGHT LB	STOCK IN AMERICA MSRP PRICING USD PAIR	STOCK IN AMERICA MSRP PRICING USD BOX
V540/I/C/R	100	150 x 100 x 100	5 7/8" x 3 7/8" x 3 7/8"	1.35	2.98	3.663	366.300

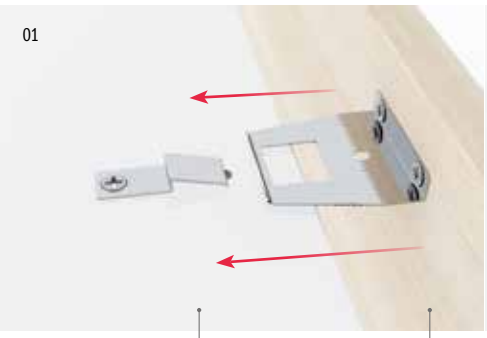

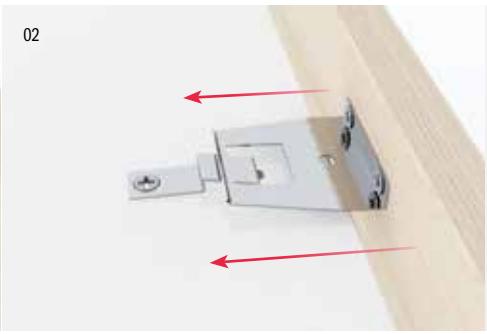

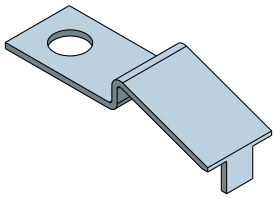

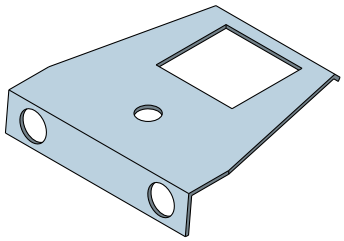

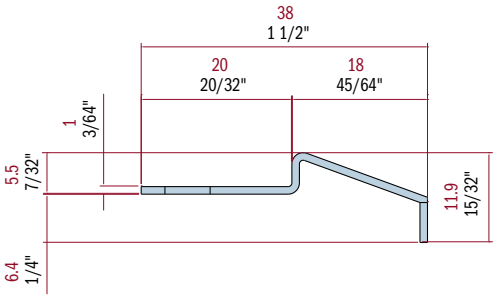

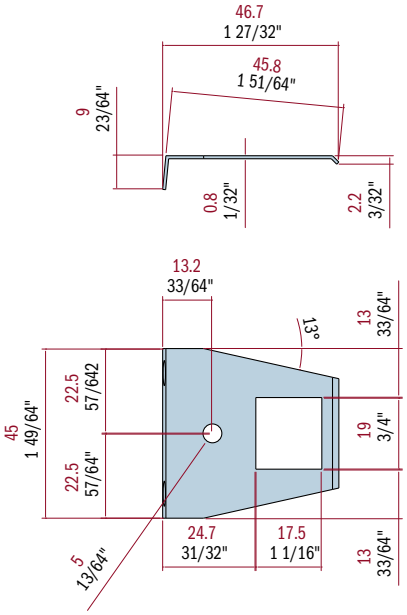

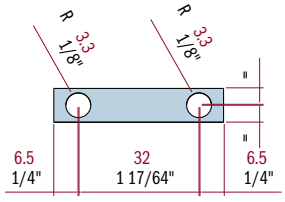

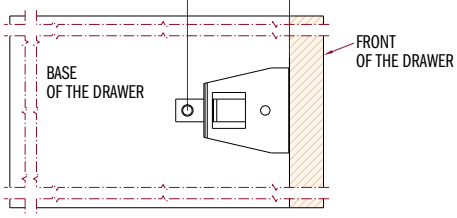

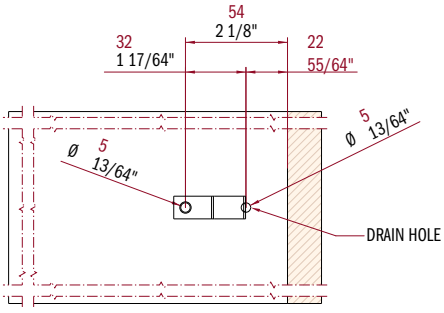

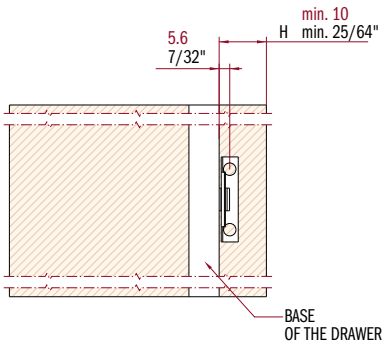

scilm AMERICA

992

PLASTIC WALL FOR SYPHON'S SPACE
Thermoplastic wall for the siphon's space in the washbasin drawer, height 35 mm, Grey Colour.

- This system consists of extruded bar and special terminals so there is the possibility to customize it in size.
- The height of 35 mm will allow the housing of the drawer even under very deep basins.
- Easy to clean.
- Unalterable.
- Protection of the base.

PAROI EN PLASTIQUE POUR ESPACE DE SIPHON
Paroi en matériau thermoplastique pour l'espace du tiroir au-dessous du lavabo, hauteur de 35 mm, couleur gris.

- *Ce système se compose d'une barre extrudée et terminaux spéciaux il y a donc la possibilité de personnaliser la taille.*
- *La hauteur de 35 mm permettra le logement du tiroir, même dans des bassins très profonds.*
- *Facile à nettoyer.*
- *Inaltérable.*
- *Protection de la base.*

PARED EN PLASTICO PARA ESPACIO SIFON
Pared baja para espacio sifón del cajón debajo del fregadero en material termoplástico, color gris.

- Sistema compuesto popr barra estruida y terminales especiales, por lo que es personalizable a la medida.
- La altura de 35 mm permite alojar el cajónincluso debajo de fregaderos muy profundos.
- Limpieza facíl.
- Inalterable en el tiempo.
- Protección de la base.

COLORS	ITEM NUMBER		KIT PER BOX	BOX DIMENSION mm W x D x H	BOX DIMENSION inch W x D x H	BOX WEIGHT KG	BOX WEIGHT LB	STOCK IN AMERICA MSRP PRICING USD KIT	STOCK IN AMERICA MSRP PRICING USD BOX
	V992/KIT/2000/9006	KIT= B (1 pcs = 2000mm - 78 3/4") + A (2 pcs) + C (2 pcs)	10	2100 x 170 x 100	82 5/8" x 6 3/4" x 3 7/8"	6.00	13.23	30.918	309.180
	V992/KIT/1000/9006	KIT= B (1 pcs = 1000mm - 39 3/8") + A (2 pcs) + C (2 pcs)	10	1100 x 160 x 100	43 1/4" x 6 1/4" x 3 7/8"	3.25	7.16	19.251	192.510

COLORS	ITEM NUMBER		KIT PER BOX	BOX DIMENSION mm W x D x H	BOX DIMENSION inch W x D x H	BOX WEIGHT KG	BOX WEIGHT LB	STOCK IN AMERICA MSRP PRICING USD KIT	STOCK IN AMERICA MSRP PRICING USD BOX
	V992/KIT/9006	KIT= A (2 pcs) + C (2 pcs)	10	250 x 180 x 170	9 7/8" x 7 1/8" x 6 3/4"	0.78	1.72	7.599	75.990

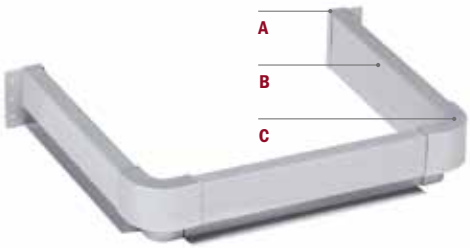

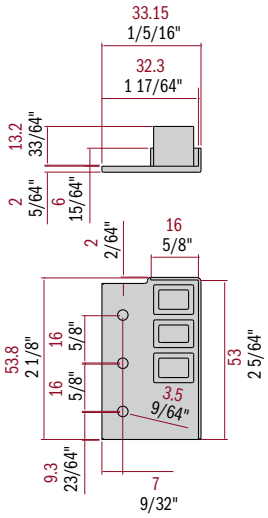

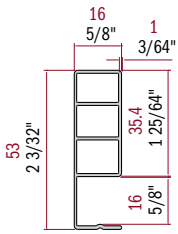

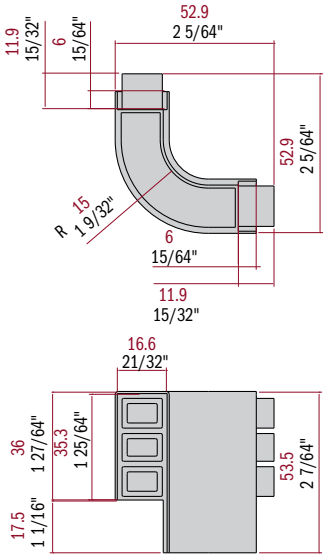

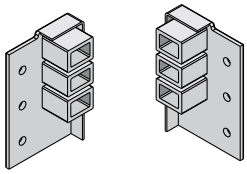

A

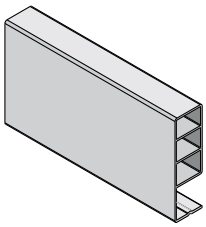

B

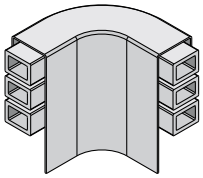

C

SINK CABINET
DRAWER'S BACK
A
A
DRAWER'S BACK
B
DRAWER
B
C
B
C
DRAWER'S FRONT

995

ORGANIZER
Vanity Drawer Organizer System Light Grey for Siphon Cut Out

CONTENEUR DE STOCKAGE
Système d'organisateur de tiroir de vanité gris clair pour la coupe de siphon

CONTENEDOR
Sistema de Contenedor Modular de PVC para Cubrir Orificios de Sifón

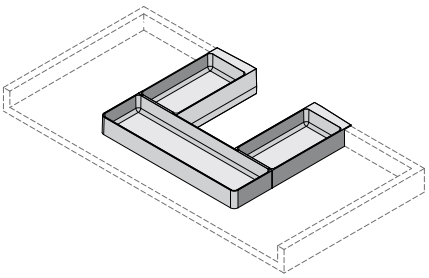

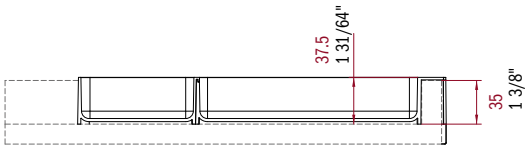

*

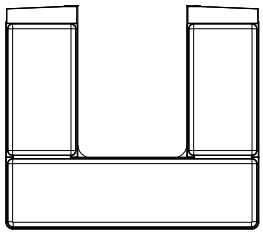

COLORS	ITEM NUMBER		LENGTH		PCS PER BOX	BOX DIMENSION		BOX WEIGHT		STOCK IN AMERICA MSRP PRICING USD	
						mm	inch				
			mm	inch		W x D x H	W x D x H	KG	LB	EACH	BOX
	V995/250/C4C/C	Central Unit	250	9 21/64"	10	500 x 210 x 210	19 5/8" x 8 1/4" x 8 1/4"	2.27	5.00	9.680	96.800
	V995/300/C4C/C	Central Unit	300	11 21/64"	10	500 x 210 x 210	19 5/8" x 8 1/4" x 8 1/4"	2.39	5.27	10.274	102.740

COLORS	ITEM NUMBER		LENGTH		PAIRS PER BOX	BOX DIMENSION		BOX WEIGHT		STOCK IN AMERICA MSRP PRICING USD	
						mm	inch				
			mm	inch		W x D x H	W x D x H	KG	LB	EACH	BOX
	V995/250/C4C/DS	L&R Side Units	250	9 21/64"	10	410 x 330 x 210	16 1/8" x 13" x 8 1/4"	2.63	5.80	12.355	123.550
	V995/300/C4C/DS	L&R Side Units	300	11 21/64"	10	410 x 330 x 210	16 1/8" x 13" x 8 1/4"	3.10	6.83	13.246	132.460

*

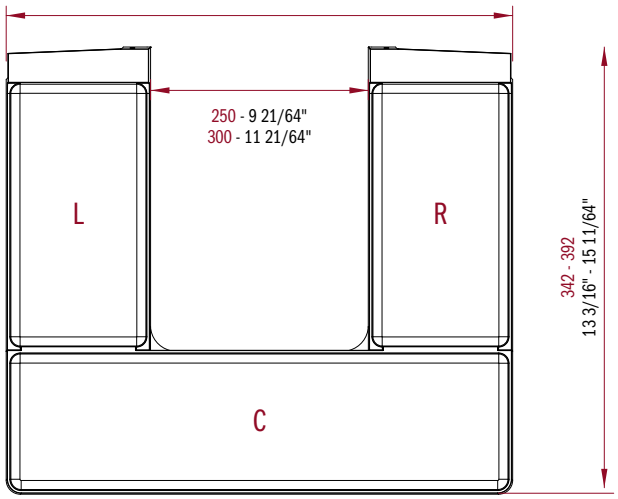

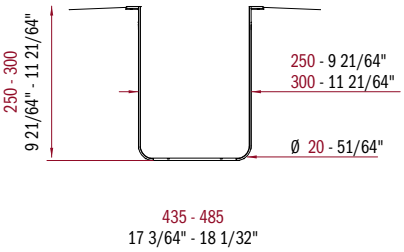

WE MAKE THE DIFFERENCE IN THE KITCHEN

BRACKETS & SUPPORTS

156 162

SUPPORT FOR SUSPENDED BASE CABINET
Galvanized corner reinforced plate with reduced edges and support bar for suspended units.

CORNIERE POUR MUEBLES SUSPENDUS
Cornière renforcée et barre zinguée pour support de meubles suspendus.

SOPORTE PARA MUEBLE BASE SOSPENDIDO
Placa angular de metal zincado con aletas reducidas y placa de soporte para apoyo de muebles suspendidos.

ITEM NUMBER	KIT PER BOX	BOX DIMENSION mm W x D x H	BOX DIMENSION inch W x D x H	BOX WEIGHT KG	BOX WEIGHT LB	STOCK IN AMERICA MSRP PRICING USD KIT	STOCK IN AMERICA MSRP PRICING USD BOX
V156/162	25	300 x 300 x 230	11 3/4" x 11 3/4" x 9"	11.00	24.25	8.803	220.075

One kit contains two pieces of 156 and two pieces of 162.

156

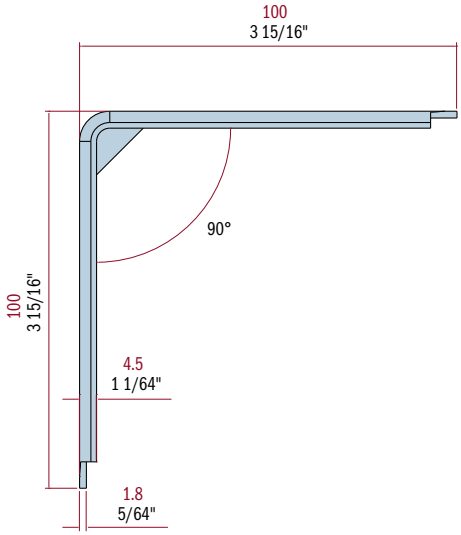

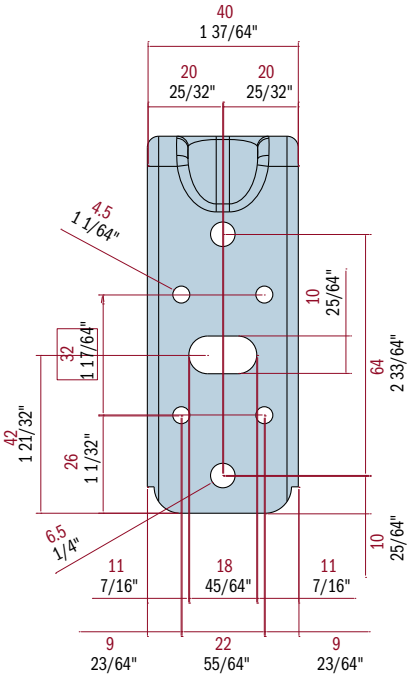

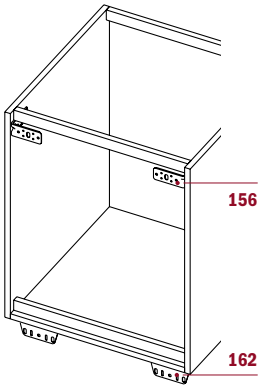

BACK OF THE BASE UNIT

162

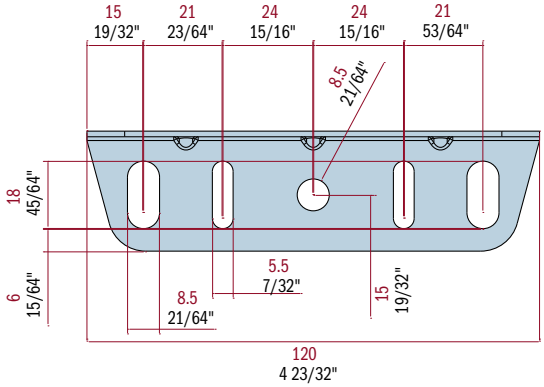

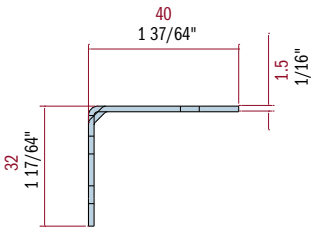

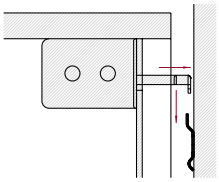

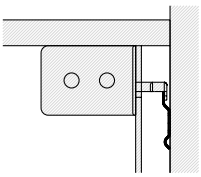

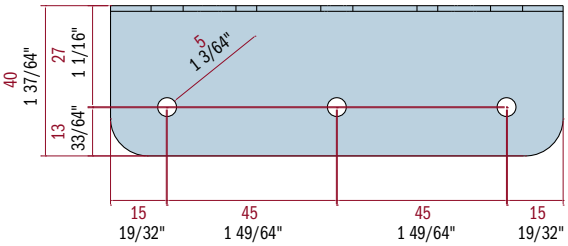

120

ADJUSTABLE HANGING BRACKETS
Adjustable right and left hanging brackets for cabinets, nylon box, with a type A hook for dowel and bar. Screw Fixing.

ATTACHE REGLABLE D'ACCROCHAGE
Attache réglable pour éléments hauts suspendus, avec crochet type A pour cheville et barre, boite en nylon. Vissé.

SOPORTE DE COLGANTES
Enganche para colgantes ajustable, caja de nylon con gancho tipo A para tacos. Para atornillar.

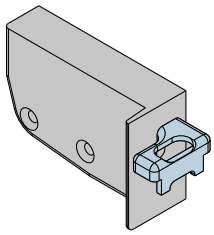

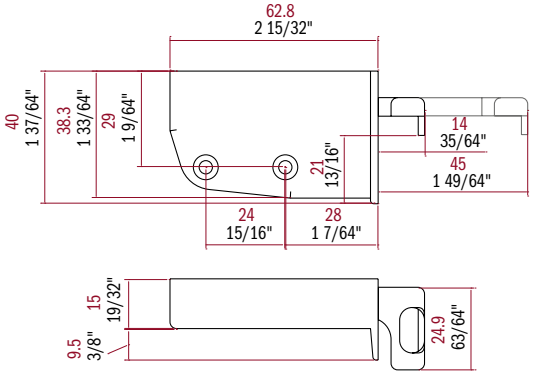

COLORS	ITEM NUMBER	PAIRS PER BOX	BOX DIMENSION mm W x D x H	BOX DIMENSION inch W x D x H	BOX WEIGHT KG	BOX WEIGHT LB	STOCK IN AMERICA MSRP PRICING USD PAIR	STOCK IN AMERICA MSRP PRICING USD BOX
	V120/C4B/DX/SX	50	250 x 250 x 100	9 7/8" x 9 7/8" x 3 7/8"	5.79	12.76	3.087	154.350

122

ADJUSTABLE HANGING BRACKETS
Adjustable right and left hanging brackets for cabinets, nylon box, with a type A hook for dowel. Doweled.

ATTACHE REGLABLE D'ACCROCHAGE
Attache réglable pour éléments hauts suspendus, avec crochet type A pour cheville, boite en nylon. Chevillé.

SOPORTE DE COLGANTES
Enganche para colgantes ajustable, caja de nylon con gancho tipo A para tacos. Para tetones.

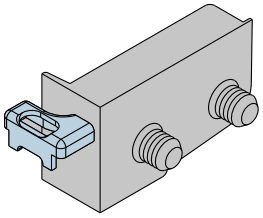

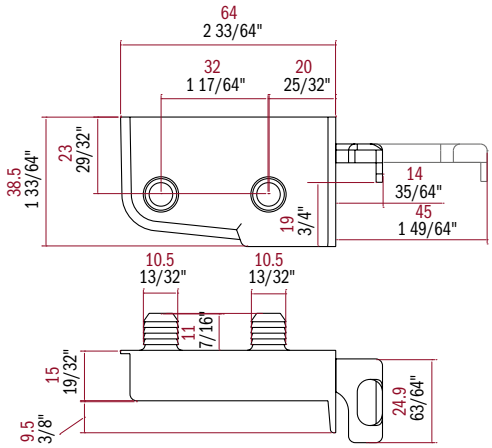

COLORS	ITEM NUMBER	PAIRS PER BOX	BOX DIMENSION mm W x D x H	BOX DIMENSION inch W x D x H	BOX WEIGHT KG	BOX WEIGHT LB	STOCK IN AMERICA MSRP PRICING USD PAIR	STOCK IN AMERICA MSRP PRICING USD BOX
	V122/C4B/DX/SX	50	250 x 250 x 100	9 7/8" x 9 7/8" x 3 7/8"	5.58	12.30	3.087	154.350

scilm AMERICA

148 1

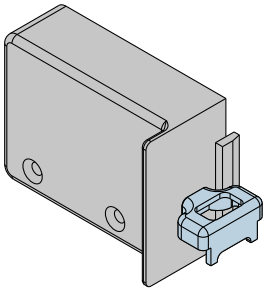

ADJUSTABLE HANGING BRACKETS
Frontally adjustable right and left hanging brackets for cabinets, nylon box. Even though both regulator screws allow the two positions to be regulated, they still remain in the same place. Furthermore, the vertical regulator screw slanted for better adjustment. Screw Fixing.

ATTACHE REGLABLE D'ACCROCHAGE
Attache pour éléments hauts suspendus D et G, à réglage frontal, fixation par vis, boite en nylon. Les deux vis restent dans leur position même si sont utilisées pour faire les deux réglages. La vis pour le réglage vertical est en position oblique afin de permettre de mieux l'ajuster. Vissé.

SOPORTE DE COLGANTES
Enganche para colgantes ajustable frontalmente, caja de Nylon, fijaciòn con tornillo. Ambos tornillos de ajuste tienen las dos regolaciones, pero permanecen siempre en la misma posiciòn. Ademàs, el tornillo de calibracioòn vertical està olocado enclinado para mejorar el ajuste. Para atornillar.

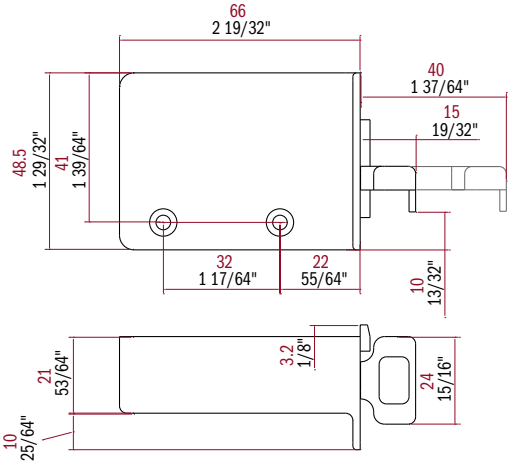

COLORS	ITEM NUMBER	PAIRS PER BOX	BOX DIMENSION mm W x D x H	BOX DIMENSION inch W x D x H	BOX WEIGHT KG	BOX WEIGHT LB	STOCK IN AMERICA MSRP PRICING USD PAIR	STOCK IN AMERICA MSRP PRICING USD BOX
	V148/1/DX/SX	50	250 x 250 x 100	9 7/8" x 9 7/8" x 3 7/8"	10.07	22.20	7.655	382.750

148 2

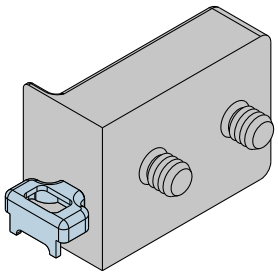

ADJUSTABLE HANGING BRACKETS
Frontally adjustable right and left hanging brackets for cabinets, nylon box. Even though both regulator screws allow the two positions to be regulated, they still remain in the same place. Furthermore, the vertical regulator screw slanted for better adjustment. Doweled.

Pins d. 10mm, pos. 20-23.

ATTACHE REGLABLE D'ACCROCHAGE
Attache pour éléments hauts suspendus D et G, à réglage frontal, fixation par cheville, boite en nylon. Les deux vis restent dans leur position même si sont utilisées pour faire les deux réglages. La vis pour le réglage vertical est en position oblique afin de permettre de mieux l'ajuster. Chevillé.

Goujons d.10mm, pos. 20-23.

SOPORTE DE COLGANTES
Enganche para colgantes ajustable frontalmente, caja de Nylon, fijaciòn con tetones.
Ambos tornillos de ajuste tienen las dos regolaciones, pero permanecen siempre en la misma posiciòn. Ademàs, el tornillo de calibracioòn vertical està colocado enclinado para mejorar el ajuste. Para tetones.

Pernos diámetro 10, posición 20-23.

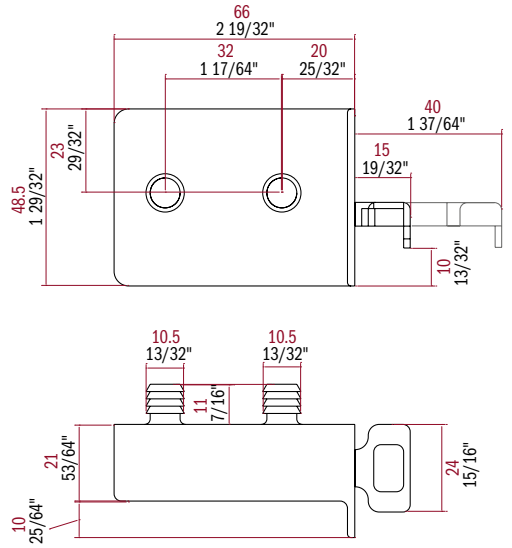

COLORS	ITEM NUMBER	PAIRS PER BOX	BOX DIMENSION mm W x D x H	BOX DIMENSION inch W x D x H	BOX WEIGHT KG	BOX WEIGHT LB	STOCK IN AMERICA MSRP PRICING USD PAIR	STOCK IN AMERICA MSRP PRICING USD BOX
	V148/2/DX/SX	50	250 x 250 x 100	9 7/8" x 9 7/8" x 3 7/8"	10.14	22.35	7.655	382.750

151

SUPPORT METAL BAR
Galvanized metal hanging bar with one back plate.

BARRE D'ACCROCHAGE
Barre d'accrochage zinguée avec un bord.

BARRA DE ENGANCHE
Barra para colgar colgantes de metal galvanizado y un borde.

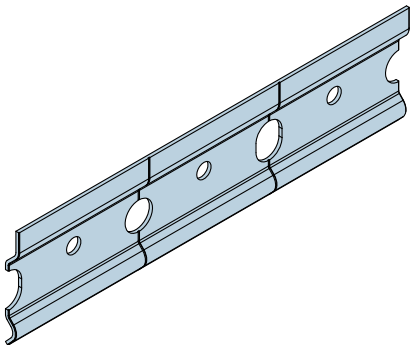

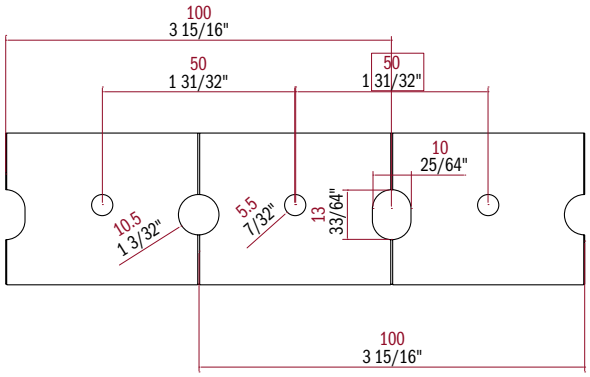

ITEM NUMBER	NEED LENGTH		PCS PER BOX	BOX DIMENSION		BOX WEIGHT		STOCK IN AMERICA MSRP PRICING USD	
				mm	inch				
	mm	inch		W x D x H	W x D x H	KG	LB	EACH	BOX
V151/02	2000	78 3/4"	25	2100 x 80 x 60	82 5/8" x 3 1/8" x 2 3/8"	20.00	44.09	5.701	142.525

scilm AMERICA

242 245

SHELF HOLDER
Shelf-support to be inserted in, with blocking cover piece, complete with a diam. 5 mm pin.

PORTE-ETAGERES
Porte-étagère en nylon à emboîtement, avec fenêtre de blocage complète de goujon en métal de 5 mm.

APOYOS DE PLANOS
Apoyo de plano de insercion con ventana de bloqueo, con perno diam. 5 mm de metal.

242

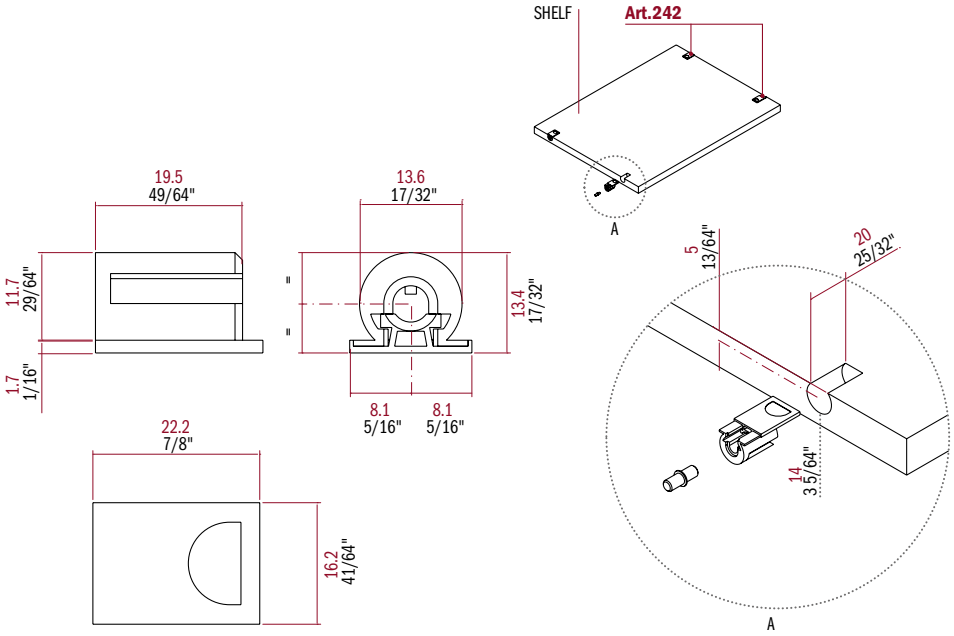

245

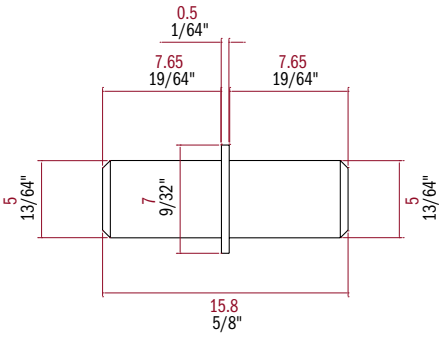

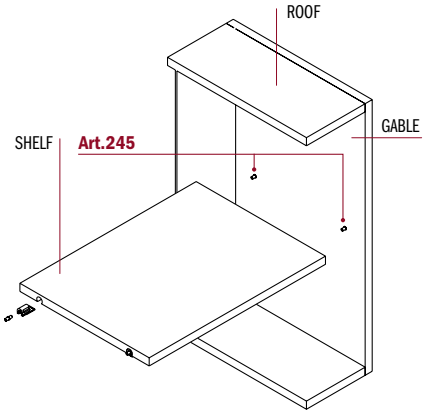

ITEM NUMBER	PAIRS PER BOX	BOX DIMENSION mm W x D x H	BOX DIMENSION inch W x D x H	BOX WEIGHT KG	BOX WEIGHT LB	STOCK IN AMERICA MSRP PRICING USD PAIR	STOCK IN AMERICA MSRP PRICING USD BOX
V242/L/CGR/245/M	500	250 x 170 x 170	9 7/8" x 6 3/4" x 6 3/4"	2.30	5.07	0.615	307.500

One pair is composed of one piece of 242 and one piece of 245.

528

GLASS SHELF HOLDER
Nickel-plated zamak shelf-support for glass shelves up to 10 mm with a 5 mm pin and extractable blocking piece by push-button.

PORTE ETAGERE EN VERRE
Porte étagère galvanisé, pour étagères en verre avec épaisseur jusqu'à 10 mm, avec languette de blocage extractible - bouton pour le décrochage. Pivot Ø 5 mm.

APOYO PARA PLANO DE CRISTAL
Apoyo de plano en zamak niquelado para cristales hasta 10 mm con lengueta de bloqueo extraible, desenganche y pulsador perno diam. 5 mm.

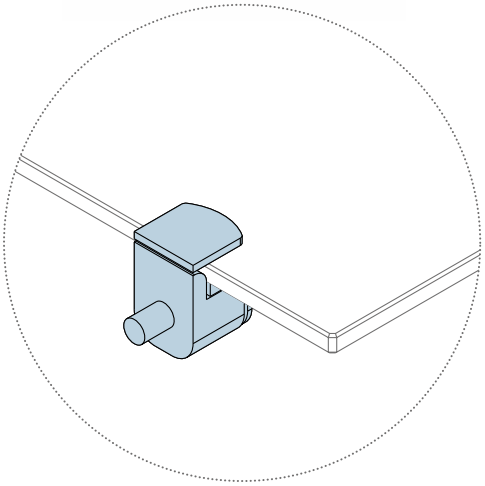

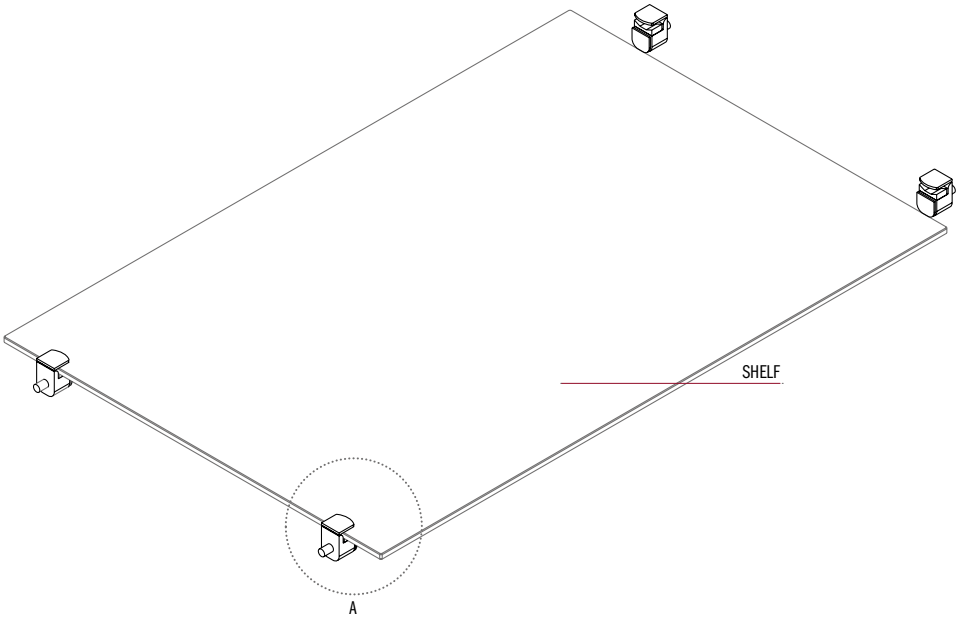

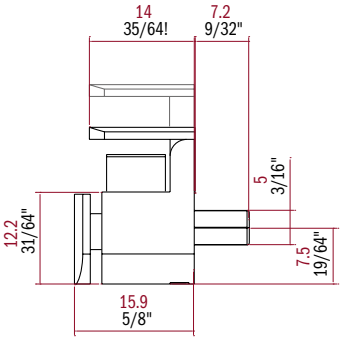

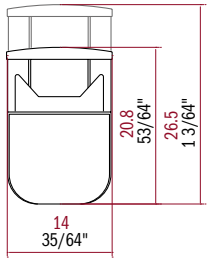

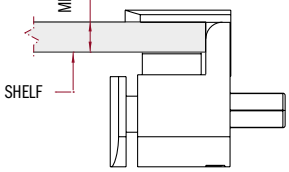

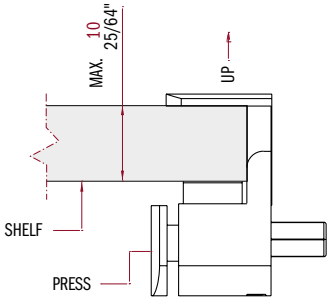

ITEM NUMBER	PCS PER BOX	BOX DIMENSION mm W x D x H	BOX DIMENSION inch W x D x H	BOX WEIGHT KG	BOX WEIGHT LB	STOCK IN AMERICA MSRP PRICING USD EACH	STOCK IN AMERICA MSRP PRICING USD BOX
V528	500	250 x 250 x 100	9 7/8" x 9 7/8" x 3 7/8"	8.30	18.30	0.986	493.000
V528/60	60	145 x 95 x 90	5 3/4" x 3 3/4" x 3 1/2"	0.95	2.09	1.313	78.780

ALUMINIUM STRUCTURES

7711

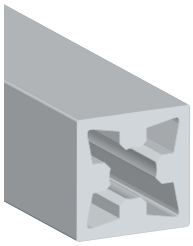

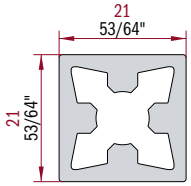

ALUMINUM UPRIGHT PROFILE FOR SHELVING STRUCTURES
50S Aluminum Clear Anodize
S2I Aluminum Titanium Anodize
V12 Aluminum Black Matt Powder Coated

PROFILÉ VERTICAL EN ALUMINIUM POUR STRUCTURES ÉTAGÈRE
50S Aluminium Clair Anodisé
S2I Aluminium Titanium Anodize
V12 Aluminium Noir Opaque Vernie

PERFIL DE MONTAJE VERTICAL DE ALUMINIO PARA ESTRUCTURAS MODULARES
50S Aluminio Anodizado Claro
S2I Aluminio Anodizado Titanio
V12 Aluminio Negro Mate Barnizado

COLORS	ITEM NUMBER	LENGTH		PCS PER BOX	BOX DIMENSION		BOX WEIGHT		STOCK IN AMERICA MSRP PRICING USD			
					mm	inch						
		mm	inch		W x D x H	W x D x H	KG	LB	METER	FOOT	EACH	BOX
50S	UR771150SL27	2670	105 1/8"	5	2740 x 150 x 50	107 7/8" x 5 7/8" x 2"	11.50	25.35	24.979	7.614	66.694	333.470
50S	UR771150SL41	4100	161 7/16"	5	4250 x 150 x 50	167 3/8" x 5 7/8" x 2"	15.00	33.07	23.289	7.098	95.485	477.425
S2I	UR7711S2IL27	2670	105 1/8"	5	2740 x 150 x 50	107 7/8" x 5 7/8" x 2"	11.50	25.35	29.656	9.039	79.182	395.908
S2I	UR7711S2IL41	4100	161 7/16"	5	4250 x 150 x 50	167 3/8" x 5 7/8" x 2"	15.00	33.07	27.703	8.444	113.582	567.912
V12	UR7711V12L27	2670	105 1/8"	5	2740 x 150 x 50	107 7/8" x 5 7/8" x 2"	11.50	25.35	25.732	7.843	68.704	343.522
V12	UR7711V12L41	4100	161 7/16"	5	4250 x 150 x 50	167 3/8" x 5 7/8" x 2"	15.00	33.07	23.999	7.315	98.396	491.980

7712

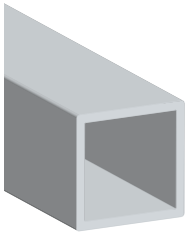

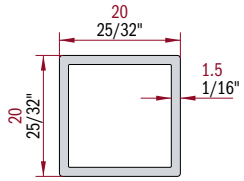

ALUMINUM LATERAL PROFILE FOR SHELVING STRUCTURES
50S Aluminum Clear Anodize
S2I Aluminum Titanium Anodize
V12 Aluminum Black Matt Powder Coated

PROFILÉ LATÉRAL EN ALUMINIUM POUR STRUCTURES ÉTAGÈRE
50S Aluminium Clair Anodisé
S2I Aluminium Titanium Anodize
V12 Aluminium Noir Opaque Vernie

PERFIL A TRAVÉS DE ALUMINIO PARA ESTRUCTURAS MODULARES
50S Aluminio Anodizado Claro
S2I Aluminio Anodizado Titanio
V12 Aluminio Negro Mate Barnizado

COLORS	ITEM NUMBER	LENGTH		PCS PER BOX	BOX DIMENSION		BOX WEIGHT		STOCK IN AMERICA MSRP PRICING USD			
					mm	inch						
		mm	inch		W x D x H	W x D x H	KG	LB	METER	FOOT	EACH	BOX
50S	UR771250SL27	2670	105 1/8"	5	2740 x 150 x 50	107 7/8" x 5 7/8" x 2"	5.00	11.02	16.818	5.126	44.904	224.520
50S	UR771250SL41	4100	161 7/16"	5	4250 x 150 x 50	167 3/8" x 5 7/8" x 2"	7.00	15.43	15.597	4.754	63.948	319.739
S2I	UR7712S2IL27	2670	105 1/8"	5	2740 x 150 x 50	107 7/8" x 5 7/8" x 2"	5.00	11.02	19.416	5.918	51.841	259.204
S2I	UR7712S2IL41	4100	161 7/16"	5	4250 x 150 x 50	167 3/8" x 5 7/8" x 2"	7.00	15.43	18.047	5.501	73.993	369.964
V12	UR7712V12L27	2670	105 1/8"	5	2740 x 150 x 50	107 7/8" x 5 7/8" x 2"	5.00	11.02	17.316	5.278	46.234	231.169
V12	UR7712V12L41	4100	161 7/16"	5	4250 x 150 x 50	167 3/8" x 5 7/8" x 2"	7.00	15.43	16.066	4.897	65.871	329.353

7713

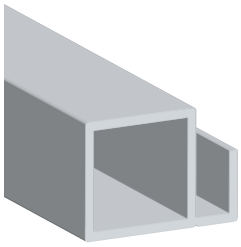

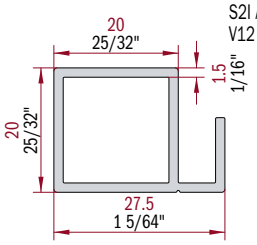

ALUMINUM FRONT & REAR PROFILE FOR SHELVING STRUCTURES
For Glass and Wood Shelves
50S Aluminum Clear Anodize
S2I Aluminum Titanium Anodize
V12 Aluminum Black Matt Powder Coated

PROFILÉ AVANT & ARRIÈRE EN ALUMINIUM POUR STRUCTURES ÉTAGÈRE
Pour les étagères en verre et en bois
50S Aluminium Clair Anodisé
S2I Aluminium Titanium Anodize
V12 Aluminium Noir Mat Peint à Poudre

PERFIL A TRAVÉS DE ALUMINIO PARA ESTRUCTURAS MODULARES
Para estantes de vidrio y madera
50S Aluminio Anodizado Claro
S2I Aluminio Anodizado Titanio
V12 Aluminio Negro Mate Barnizado

COLORS	ITEM NUMBER	LENGTH		PCS PER BOX	BOX DIMENSION		BOX WEIGHT		STOCK IN AMERICA MSRP PRICING USD			
					mm	inch						
		mm	inch		W x D x H	W x D x H	KG	LB	METER	FOOT	EACH	BOX
50S	UR771350SL27	2670	105 1/8"	5	2740 x 150 x 50	107 7/8" x 5 7/8" x 2"	6.50	14.33	18.083	5.512	48.282	241.408
50S	UR771350SL41	4100	161 7/16"	5	4250 x 150 x 50	167 3/8" x 5 7/8" x 2"	9.00	19.84	16.791	5.118	68.843	344.216
S2I	UR7713S2IL27	2670	105 1/8"	5	2740 x 150 x 50	107 7/8" x 5 7/8" x 2"	6.50	14.33	20.709	6.312	55.293	276.465
S2I	UR7713S2IL41	4100	161 7/16"	5	4250 x 150 x 50	167 3/8" x 5 7/8" x 2"	9.00	19.84	19.240	5.864	78.884	394.420
V12	UR7713V12L27	2670	105 1/8"	5	2740 x 150 x 50	107 7/8" x 5 7/8" x 2"	6.50	14.33	18.620	5.675	49.715	248.577
V12	UR7713V12L41	4100	161 7/16"	5	4250 x 150 x 50	167 3/8" x 5 7/8" x 2"	9.00	19.84	17.297	5.272	70.918	354.589

CEP

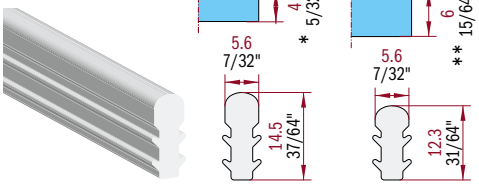

GASKET FOR GLASS SHELVES
* For 4mm - 5/32" glass
** For 6mm - 1/4" glass

JOINT D'ÉTANCHÈITÉ POUR ÉTAGÈRE EN VERRE
** Pour verre de 4mm - 5/32"*
*** Pour verre de 6mm - 1/4"*

JUNTA PARA ESTANTES DE VIDRIO
* Para de vidrio 4mm - 5/32"
** Para de vidrio 6mm - 1/4"

	ITEM NUMBER	LENGTH		PCS PER BOX	BOX DIMENSION		BOX WEIGHT		STOCK IN AMERICA MSRP PRICING USD			
					mm	inch						
		METER	inch		W x D x H	W x D x H	KG	LB	METER	FOOT	EACH	BOX
*	URCEP0038-01	40	1574 13/16''	1	460 x 170 x 120	18 1/8" x 6 3/4" x 4 3/4"	1.50	3.31	4.945	1.507	197.800	197.800
**	URCEP0039-01	40	1574 13/16''	1	460 x 170 x 120	18 1/8" x 6 3/4" x 4 3/4"	1.00	2.20	4.945	1.507	197.800	197.800

7715

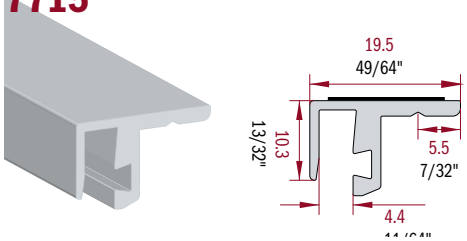

UPPER PROFILE IN ALUMINUM FOR THE CREATION OF LATERAL AND REAR CLOSURES FOR THE SHELVING STRUCTURE.
To be used with URCEP0037-01 gasket (not included).
With pre-installed double-sided tape
50S Aluminum Clear Anodize
S2I Aluminum Titanium Anodize
V12 Aluminum Black Matt Powder Coated

UPPER PROFILE IN ALUMINUM FOR THE CREATION OF LATERAL AND REAR CLOSURES FOR THE SHELVING STRUCTURE.
TO BE USED WITH URCEP0037-01 GASKET (NOT INCLUDED).
WITH PRE-INSTALLED DOUBLE-SIDED TAPE
50S ALUMINUM CLEAR ANODIZE
S2I ALUMINUM TITANIUM ANODIZE
V12 ALUMINUM BLACK MATT POWDER COATED

PERFIL SUPERIOR EN ALUMINIO PARA LA CREACIÓN DE CIERRES LATERALES Y TRASEROS PARA LA ESTRUCTURA DE ESTANTERÍAS.
Para ser utilizado con la junta URCEP0037-01 (no incluida).
Con cinta de doble cara preinstalada
50S Aluminio Anodizado Claro
S2I Aluminio Anodizado Titanio
V12 Aluminio Negro Mate Barnizado

COLORS	ITEM NUMBER	LENGTH		PCS PER BOX	BOX DIMENSION		BOX WEIGHT		STOCK IN AMERICA MSRP PRICING USD			
					mm	inch						
		mm	inch		W x D x H	W x D x H	KG	LB	METER	FOOT	EACH	BOX
50S	UR771550SL27	2670	105 1/8"	5	2740 x 150 x 50	107 7/8" x 5 7/8" x 2"	5.50	12.13	24.696	7.527	65.938	329.692
50S	UR771550SL41	4100	161 7/16"	5	4250 x 150 x 50	167 3/8" x 5 7/8" x 2"	7.80	17.20	22.839	6.961	93.640	468.200
S2I	UR7715S2IL27	2670	105 1/8"	5	2740 x 150 x 50	107 7/8" x 5 7/8" x 2"	5.50	12.13	31.429	9.580	83.915	419.577
S2I	UR7715S2IL41	4100	161 7/16"	5	4250 x 150 x 50	167 3/8" x 5 7/8" x 2"	7.80	17.20	29.339	8.943	120.290	601.450
V12	UR7715V12L27	2670	105 1/8"	5	2740 x 150 x 50	107 7/8" x 5 7/8" x 2"	5.50	12.13	25.273	7.703	67.479	337.395
V12	UR7715V12L41	4100	161 7/16"	5	4250 x 150 x 50	167 3/8" x 5 7/8" x 2"	7.80	17.20	23.534	7.173	96.489	482.447

7716

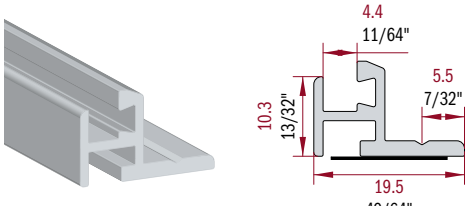

ALUMINUM LOWER PROFILE FOR CREATING LATERAL AND REAR CLOSURES FOR THE SHELVING STRUCTURE.
To be used with URCEP0037-01 gasket (not included).
With pre-installed double-sided tape
50S Aluminum Clear Anodize
S2I Aluminum Titanium Anodize
V12 Aluminum Black Matt Powder Coated

PROFIL INFÉRIEUR EN ALUMINIUM POUR CRÉER DES FERMETURES LATÉRALES ET ARRIÈRE POUR LA STRUCTURE DE RAYONNAGE.
À utiliser avec le joint URCEP0037-01 (non inclus).
Avec du ruban adhésif double face préinstallé
50S Aluminium Clair Anodisé
S2I Aluminium Titanium Anodize
V12 Aluminium Noir Opaque Vernie

PERFIL INFERIOR DE ALUMINIO PARA CREAR CIERRES LATERALES Y TRASEROS PARA LA ESTRUCTURA DE ESTANTERÍAS.
Para ser utilizado con la junta URCEP0037-01 (no incluida).
Con cinta de doble cara preinstalada
50S Aluminio Anodizado Claro
S2I Aluminio Anodizado Titanio
V12 Aluminio Negro Mate Barnizado

COLORS	ITEM NUMBER	LENGTH		PCS PER BOX	BOX DIMENSION		BOX WEIGHT		STOCK IN AMERICA MSRP PRICING USD			
					mm	inch						
		mm	inch		W x D x H	W x D x H	KG	LB	METER	FOOT	EACH	BOX
50S	UR771650SL27	2670	105 1/8"	5	2740 x 150 x 50	107 7/8" x 5 7/8" x 2"	5.50	12.13	24.122	7.352	64.406	322.029
50S	UR771650SL41	4100	161 7/16"	5	4250 x 150 x 50	167 3/8" x 5 7/8" x 2"	7.80	17.20	22.451	6.843	92.049	460.246
S2I	UR7716S2IL27	2670	105 1/8"	5	2740 x 150 x 50	107 7/8" x 5 7/8" x 2"	5.50	12.13	30.999	9.448	82.767	413.837
S2I	UR7716S2IL41	4100	161 7/16"	5	4250 x 150 x 50	167 3/8" x 5 7/8" x 2"	7.80	17.20	28.934	8.819	118.629	593.147
V12	UR7716V12L27	2670	105 1/8"	5	2740 x 150 x 50	107 7/8" x 5 7/8" x 2"	5.50	12.13	24.848	7.574	66.344	331.721
V12	UR7716V12L41	4100	161 7/16"	5	4250 x 150 x 50	167 3/8" x 5 7/8" x 2"	7.80	17.20	23.135	7.052	94.854	474.268

CEP

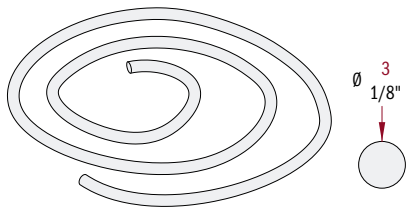

ROUND SEAL FOR FIXING THE REAR AND SIDE CLOSURES.
To be used with profiles 7715 and 7716.
In rolls of 40 meters

JOINT ROND POUR FIXER LES FERMETURES ARRIÈRE ET LATÉRALES.
A utiliser avec les profilés 7715 et 7716.
En rouleaux de 40 mètres

SELLO REDONDO PARA LA FIJACIÓN DE LOS CIERRES TRASEROS Y LATERALES.
Para ser utilizado con los perfiles 7715 y 7716.
En rollos de 40 metros

COLORS	ITEM NUMBER	LENGTH		PCS PER BOX	BOX DIMENSION		BOX WEIGHT		STOCK IN AMERICA MSRP PRICING USD			
					mm	inch						
		mm	inch		W x D x H	W x D x H	KG	LB	METER	FOOT	EACH	BOX
50S	URCEP0037-01	40000	1574 13/16"	1	220 x 190 x 160	8 5/8" x 7 1/2" x 6 1/4"	0.70	1.54	1.025	0.312	41.000	41.000

scilm AMERICA

7717

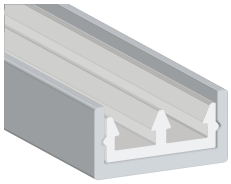

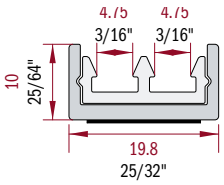

ALUMINUM PROFILE FOR THE REALIZATION OF SLIDING DOORS FOR THE SHELVING STRUCTURE.
Seal included.
With pre-installed double-sided tape.
50S Aluminum Clear Anodize
S2I Aluminum Titanium Anodize
V12 Aluminum Black Matt Powder Coated

PROFIL EN ALUMINIUM POUR LA RÉALISATION DE PORTES COULISSANTES POUR LA STRUCTURE DE RAYONNAGE.
Joint inclus.
Avec du ruban adhésif double face préinstallé
50S Aluminium Clair Anodisé
S2I Aluminium Titanium Anodize
V12 Aluminium Noir Opaque Vernie

PERFIL DE ALUMINIO PARA LA REALIZACIÓN DE PUERTAS CORREDERAS PARA LA ESTRUCTURA DE ESTANTERÍAS.
Sello incluido.
Con cinta de doble cara preinstalada
50S Aluminio Anodizado Claro
S2I Aluminio Anodizado Titanio
V12 Aluminio Negro Mate Barnizado

COLORS	ITEM NUMBER	LENGTH		PCS PER BOX	BOX DIMENSION		BOX WEIGHT		STOCK IN AMERICA MSRP PRICING USD			
					mm	inch						
		mm	inch		W x D x H	W x D x H	KG	LB	METER	FOOT	EACH	BOX
50S	UR771750SL27	2670	105 1/8"	5	2740 x 150 x 50	107 7/8" x 5 7/8" x 2"	3.50	7.72	26.774	8.161	71.487	357.433
50S	UR771750SL41	4100	161 7/16"	5	4250 x 150 x 50	167 3/8" x 5 7/8" x 2"	4.65	10.25	24.982	7.615	102.426	512.131
S2I	UR7717S2IL27	2670	105 1/8"	5	2740 x 150 x 50	107 7/8" x 5 7/8" x 2"	3.50	7.72	33.380	10.174	89.125	445.623
S2I	UR7717S2IL41	4100	161 7/16"	5	4250 x 150 x 50	167 3/8" x 5 7/8" x 2"	4.65	10.25	31.210	9.513	127.961	639.805
V12	UR7717V12L27	2670	105 1/8"	5	2740 x 150 x 50	107 7/8" x 5 7/8" x 2"	3.50	7.72	27.583	8.407	73.647	368.233
V12	UR7717V12L41	4100	161 7/16"	5	4250 x 150 x 50	167 3/8" x 5 7/8" x 2"	4.65	10.25	25.744	7.847	105.550	527.752

CLA0138

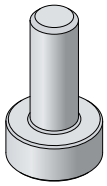

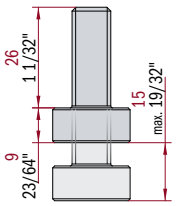

ALUMINUM LEVELER
FOR SHELVING STRUCTURES
50S Aluminum Clear Anodize

NIVELEUR EN ALUMINIUM
POUR STRUCTURES ÉTAGÈRE
50S Aluminium Clair Anodisé

NIVELADOR EN ALUMINIO
PARA ESTRUCTURAS MODULARES
50S Aluminio Anodizado Claro

COLORS	ITEM NUMBER	PCS PER BOX	BOX DIMENSION		BOX WEIGHT		STOCK IN AMERICA MSRP PRICING USD	
			mm	inch				
			W x D x H	W x D x H	KG	LB	EACH	BOX
50S	URCLA0138	10	150 x 100 x 90	5 7/8" x 3 7/8" x 3 1/2"	1.00	2.20	13.853	138.530

CLF0061

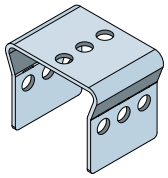

JIG FOR DRILLING ALUMINUM STRUCTURE PROFILES 7711

GABARIT POUR PERCER LES PROFILÉS EN ALUMINIUM 7711

PLANTILLA PARA PERFIL VERTICAL 7711

COLORS	ITEM NUMBER	PCS PER BOX	BOX DIMENSION		BOX WEIGHT		STOCK IN AMERICA MSRP PRICING USD	
			mm	inch				
			W x D x H	W x D x H	KG	LB	EACH	BOX
	URCLF0061	5	150 x 100 x 90	5 7/8" x 3 7/8" x 3 1/2"	0.50	1.10	16.305	81.525

CSP0224

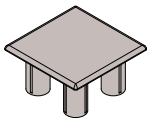

PLASTIC CAP FOR UPRIGHT PROFILE 7711
53A - Color Match for 50S
52A - Color Match for S2I
06 - Color Match for V12

EMBOUT EN PLASTIQUE POUR PROFILÉ 7711
53A - Couleur Correspondante pour 50S
52A - Couleur Correspondante pour S2I
06 - Couleur Correspondante pour V12

TAPA PLÁSTICA PARA PERFIL VERTICAL 7711
53A - Ajuste de Color 50S Anodizado Claro
52A - Ajuste de Color S2I Anodizado Titanio
06 - Ajuste de Color V12 Negro Mate Barnizado

COLORS	ITEM NUMBER	PCS PER BOX	BOX DIMENSION		BOX WEIGHT		STOCK IN AMERICA MSRP PRICING USD	
			mm	inch				
			W x D x H	W x D x H	KG	LB	EACH	BOX
53A	URCSP0224-53A	50	150 x 100 x 90	5 7/8" x 3 7/8" x 3 1/2"	1.50	3.31	2.252	112.600
52A	URCSP0224-52A	50	150 x 100 x 90	5 7/8" x 3 7/8" x 3 1/2"	1.50	3.31	2.252	112.600
06	URCSP0224-06	50	150 x 100 x 90	5 7/8" x 3 7/8" x 3 1/2"	1.50	3.31	1.124	56.200

KIT 20X20

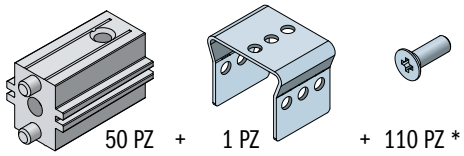

JUNCTION BLOCK WITH SCREWS FOR SHELVING STRUCTURES
Junction Block (50) + Jig (1) + Screws (110)
UKIT.20X20.01 Darkened Screws for V12
UKIT.20x20.02 Zinc Plated Screws for 50S & S2I

BLOC DE JONCTION AVEC VIS POUR STRUCTURES ÉTAGÈRE
Bloc de Jonction (50) + Gabarit (1) + Vis (110)
UKIT.20X20.01 Vis Bruni pour V12
UKIT.20x20.02 Vis Zingué pour 50S & S2I

BLOQUES DE JUNCCIÓN CON TORNILLOS PARA ESTRUCTURAS MODULARES
Bloques de Junccion (50) + Plantilla (1) + Tornillos (110)
UKIT.20X20.01 Tornillos bruñido para V12 Negro Mate Barnizado
UKIT.20x20.02 Tornillos Galvanizado para 50S Anodizado Claro, S2I Anodizado Titanio

ITEM NUMBER	KIT PER BOX	BOX DIMENSION mm W x D x H	BOX DIMENSION inch W x D x H	BOX WEIGHT KG	BOX WEIGHT LB	STOCK IN AMERICA MSRP PRICING USD KIT	STOCK IN AMERICA MSRP PRICING USD BOX
UKIT.20X20.01	1	150 x 100 x 90	5 7/8" x 3 7/8" x 3 1/2"	1.50	3.31	161.696	161.696
UKIT.20X20.02	1	150 x 100 x 90	5 7/8" x 3 7/8" x 3 1/2"	1.50	3.31	161.696	161.696

1756

BRACKET FOR HANGING THE SHELF STRUCTURE ON THE WALL

SUPPORT POUR ACCROCHER LA STRUCTURE DE L'ÉTAGÈRE AU MUR

SOPORTE PARA COLGAR LA ESTRUCTURA DEL ESTANTE EN LA PARED

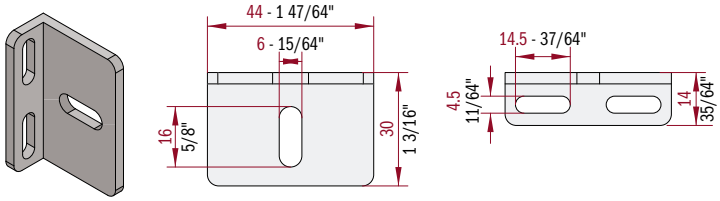

COLORS	ITEM NUMBER	PCS PER BOX	BOX DIMENSION mm W x D x H	BOX DIMENSION inch W x D x H	BOX WEIGHT KG	BOX WEIGHT LB	STOCK IN AMERICA MSRP PRICING USD METER	FOOT	EACH	BOX
	U1756.0001	50	160 x 215 x 130	6 1/4" x 8 1/2" x 5 1/8"	1.20	2.65			5.829	291.450

RCSA0010

JUNCTION BLOCK FOR SHELF STRUCTURES

BLOC DE JONCTION POUR LES STRUCTURES D'ÉTAGÈRES

BLOQUE DE UNIÓN PARA ESTRUCTURAS DE ESTANTERÍA

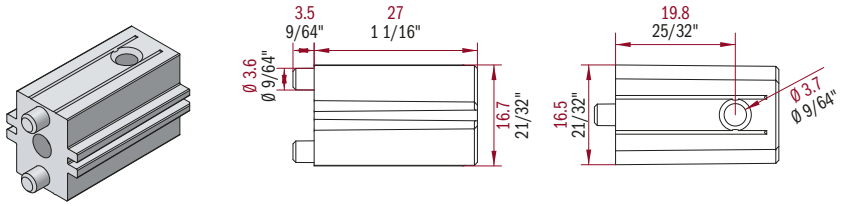

ITEM NUMBER	KIT PER BOX	BOX DIMENSION mm W x D x H	BOX DIMENSION inch W x D x H	BOX WEIGHT KG	BOX WEIGHT LB	STOCK IN AMERICA MSRP PRICING USD EACH	STOCK IN AMERICA MSRP PRICING USD BOX
URCSA0010	100	145 x 95 x 85	5 3/4" x 3 3/4" x 3 3/8"	2.50	5.51	2.560	256.000

VSTP10X12EI

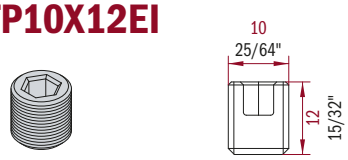

GRUB SCREW FOR ADJUSTING THE LEVEL OF THE SHELF STRUCTURE.
For use with the UFASW08X150ZP angled screw

VIS SANS TÊTE POUR RÉGLER LE NIVEAU DE LA STRUCTURE DE L'ÉTAGÈRE.
À utiliser avec la vis coudée UFASW08X150ZP

TORNILLO SIN CABEZA PARA AJUSTAR EL NIVEL DE LA ESTRUCTURA DEL ESTANTE.
Para usar con el tornillo en ángulo UFASW08X150ZP

ITEM NUMBER	KIT PER BOX	BOX DIMENSION mm W x D x H	BOX DIMENSION inch W x D x H	BOX WEIGHT KG	BOX WEIGHT LB	STOCK IN AMERICA MSRP PRICING USD EACH	STOCK IN AMERICA MSRP PRICING USD BOX
UVSTB10X12EI	100	145 x 95 x 85	5 3/4" x 3 3/4" x 3 3/8"	0.50	1.10	0.595	59.500

ASW08

ANGLED SCREW FOR HANGING THE SHELF STRUCTURE ON THE WALL

VIS COUDÉE POUR ACCROCHER LA STRUCTURE DE L'ÉTAGÈRE AU MUR

TORNILLO EN ÁNGULO PARA COLGAR LA ESTRUCTURA DEL ESTANTE EN LA PARED

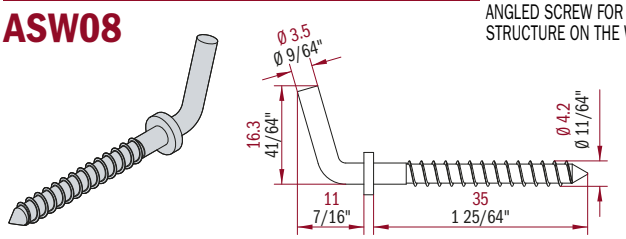

ITEM NUMBER	KIT PER BOX	BOX DIMENSION mm W x D x H	BOX DIMENSION inch W x D x H	BOX WEIGHT KG	BOX WEIGHT LB	STOCK IN AMERICA MSRP PRICING USD EACH	STOCK IN AMERICA MSRP PRICING USD BOX
UFASW08X150ZP	100	145 x 95 x 85	5 3/4" x 3 3/4" x 3 3/8"	5	11.02	0.122	12.200

scilm AMERICA

How...
Manufacturing Specifications

Comment...
Spécifications de Fabrication

Cómo...
Especificaciones de Fabricación

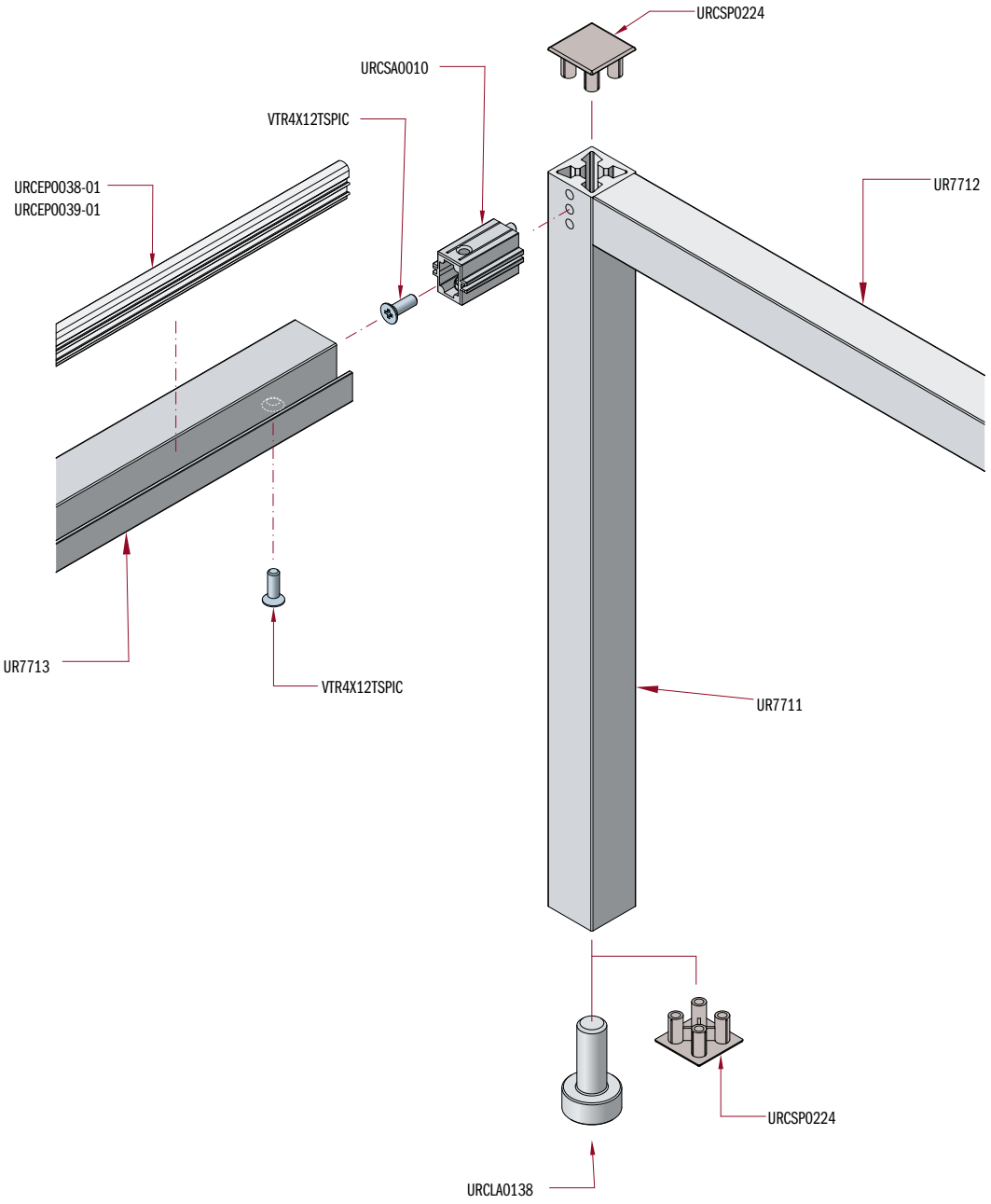

UR7712
ALUMINUM LATERAL PROFILE FOR SHELVING STRUCTURES

PROFILÉ LATÉRAL EN ALUMINIUM POUR STRUCTURES ÉTAGÈRE

PERFIL A TRAVÉS DE ALUMINIO PARA ESTRUCTURAS MODULARES

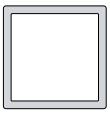

R7713
ALUMINUM FRONT & REAR PROFILE FOR SHELVING STRUCTURES
For 4mm - 5/32" or 6mm 15/64" Glass

PROFILÉ AVANT & ARRIÈRE EN ALUMINIUM POUR STRUCTURES ÉTAGÈRE
Pour Verre de 4mm - 5/32" à 6mm - 15/64"

PERFIL A TRAVÉS DE ALUMINIO PARA ESTRUCTURAS MODULARES
Para Vidrio de 4mm - 5/32" o 6mm - 15/64"

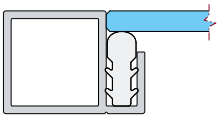

R7713
ALUMINUM FRONT & REAR PROFILE FOR SHELVING STRUCTURES
For 8mm - 5/16 to 19mm - 3/4" wood panels

PROFILÉ AVANT & ARRIÈRE EN ALUMINIUM POUR STRUCTURES ÉTAGÈRE
Pour 8mm - 5/16" à 19mm - 3/4"

PERFIL A TRAVÉS DE ALUMINIO PARA ESTRUCTURAS MODULARES
Para panel de madera de 8mm - 5/16" hasta 19mm - 3/4"

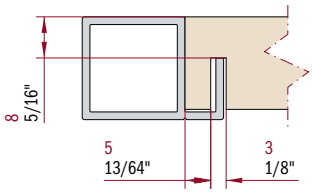

DRILLING PATTERNS - *MODÈLES DE FORAGE* - MODELOS DE PERFORACION

LATERAL AND FRONT/REAR PROFILE'S PATTERNS
MODÈLES POUR PROFILÉ LATÉRAL EN ALUMINIUM POUR STRUCTURES ÉTAGÈRE
MODELOS PARA PERFIL A TRAVÉS DE ALUMINIO PARA ESTRUCTURAS MODULARES

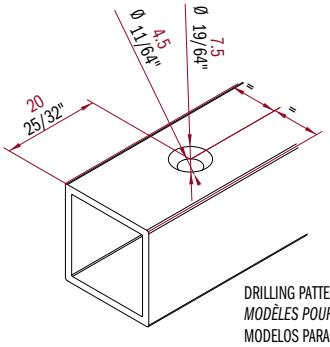

DRILLING PATTERN FOR JUNCTION BLOCK
MODÈLES POUR BLOC DE JONCTION
MODELOS PARA BLOQUES DE JUNCCIÓN

DRILLING PATTERNS PROFILES R7712 / R7713
MODÈLES POUR PROFILÉ R7712 / R7713
MODELOS PARA PERFILES R7712 / R7713

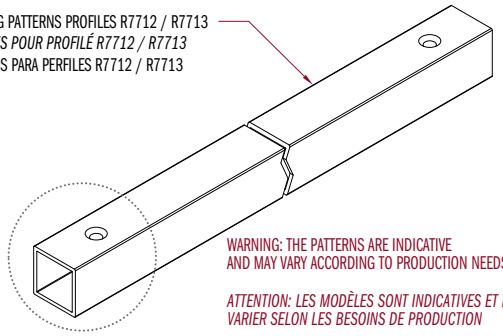

WARNING: THE PATTERNS ARE INDICATIVE
AND MAY VARY ACCORDING TO PRODUCTION NEEDS

ATTENTION: LES MODÈLES SONT INDICATIVES ET PEUVENT VARIER SELON LES BESOINS DE PRODUCTION

ATENCIÓN: LOS MODELOS SON INDICATIVOS
Y PUEDEN VARIAR SEGÚN LAS NECESIDADES DE PRODUCCIÓN

UPRIGHT PROFILE DRILLING PATTERN
MODÈLES POUR PROFILÉ VERTICAL EN ALUMINIUM POUR STRUCTURES ÉTAGÈRE
MODELOS PARA PERFIL VERTICAL DE ALUMINIO PARA ESTRUCTURAS MODULARES

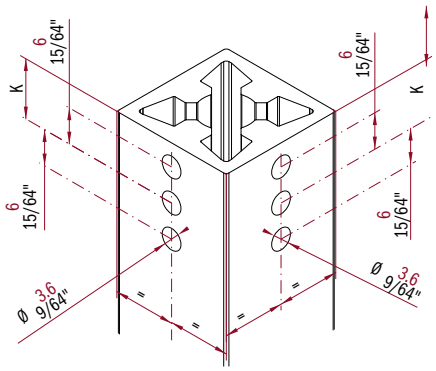

DRILLING PATTERN FOR JUNCTION BLOCK
K = 8.7mm - 11/32" with cap
K = 9.7mm - 3/8" without cap

MODÈLES DE FORAGE POUR BLOC DE JONCTION
K = 8.7mm - 11/32" avec embout
K = 9.7mm - 3/8" sans embout

MODELOS DE PERFORACION PARA BLOQUES DE JUNCCIÓN
K = 8.7mm - 11/32" con tapa
K =9.7mm - 3/8" sin tapa

WARNING: THE PATTERNS ARE INDICATIVE
AND MAY VARY ACCORDING TO PRODUCTION NEE

ATTENTION: LES MODÈLES SONT INDICATIVES ET PEUVENT VARIER SELON LES BESOINS DE PRODUCTION

ATENCIÓN: LOS MODELOS SON INDICATIVOS
Y PUEDEN VARIAR SEGÚN LAS NECESIDADES DE PRODUCCIÓN

If used with leveller URCLA0138,
thread M10 - 30mm - 1" 3/16
depth at the bottom edge

Si vous utilisez le filetage droit URCLA0138
M10 30mm 1 3/16"
de profondeur au fond

Si usa el nivellador URCLA0138
hacer un hilo M10 de 30mm - 1" 3/16
de profundidad en la parte inferior

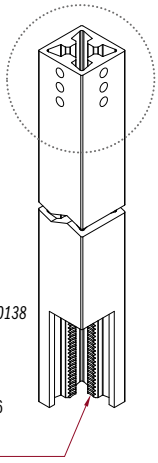

DRILLING PATTERNS FOR WALL MOUNTING
MODELES DE FORAGE POUR MONTAGE MURAL
MODELOS DE PERFORACION PARA MONTAJE A PARED

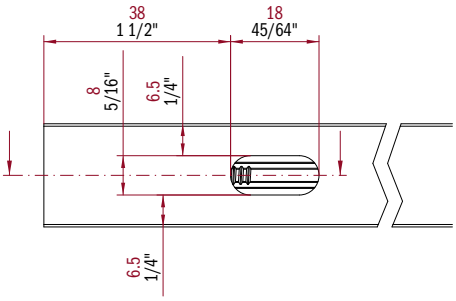

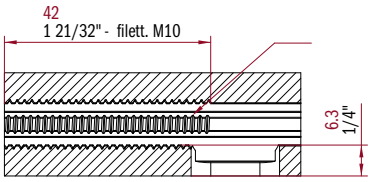

UPPER SIDE
FACE SUPÉRIEURE
SUPERIOR

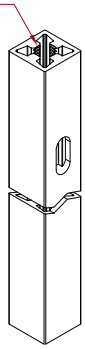

DRILLING WITH JIG CLF0061
FORAGE AVEC GABARIT CLF0061
PERFORACIÓN CON JIG CLF0061

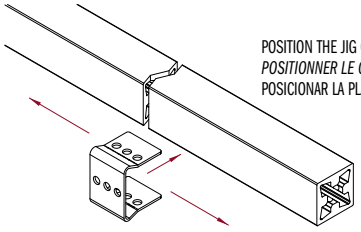

POSITION THE JIG ON PROFILE UR7711
POSITIONNER LE GABARIT SUR PROFIL UR7711
POSICIONAR LA PLANTILLA EN EL PERFIL UR7711

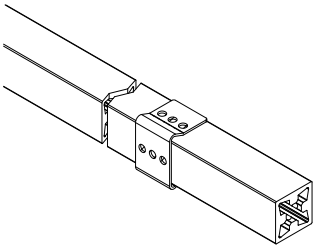

MARK THE HOLES
REMOVE THE JIG
DRILL THE PROFILE

MARQUEZ LES TROUS
RETIRER LE GABARIT
PERCER LE PROFILÉ

MARCAR AGUJEROS
QUITAR LA PLANTILLA
AGUJERAR EL PERFIL

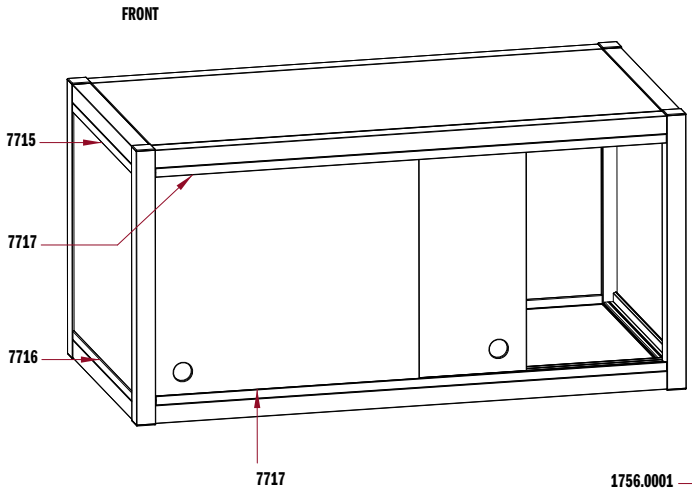

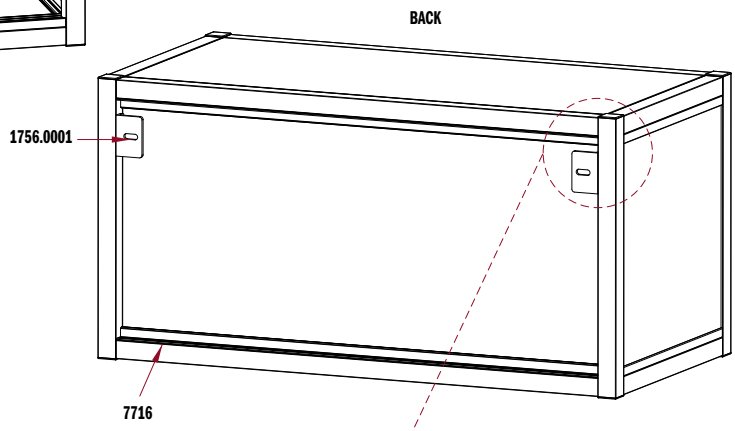

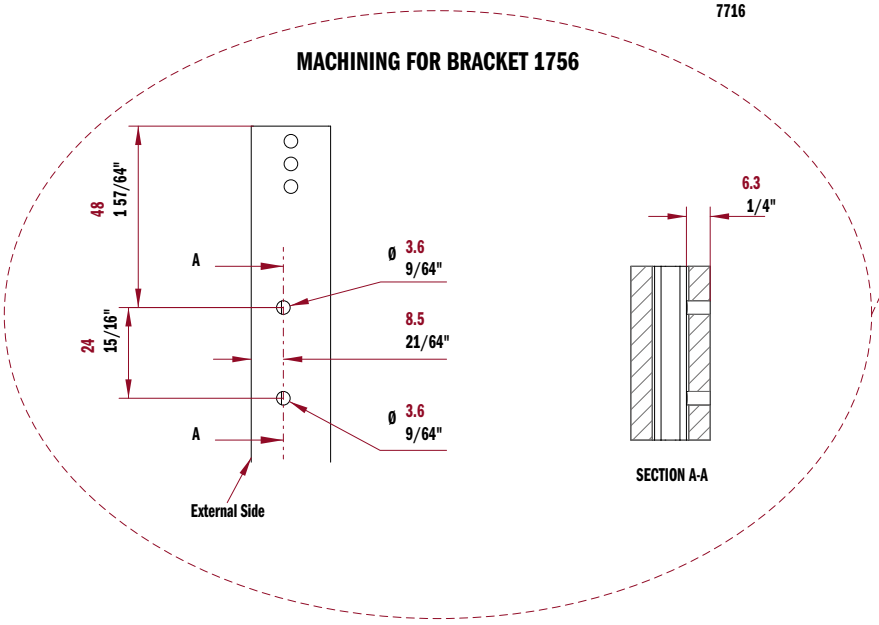

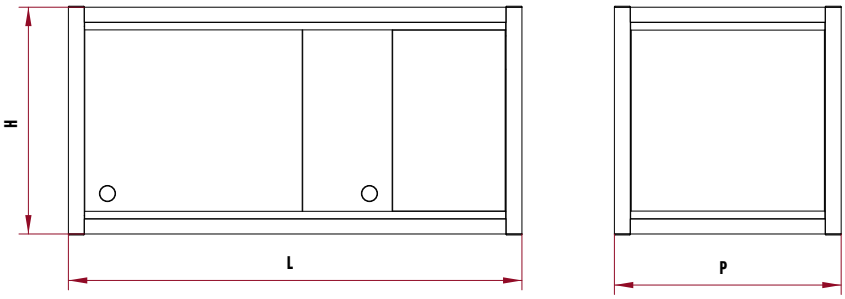

CALCULATION FOR 4mm THICK GLASS OR 4mm THICK PANELS

BACK - Hc = H-52.5mm Lc = L-43mm
SIDES - Hc = H-52.5mm Pc = P-43mm
FRONT - Hc = H-48mm Lc = (L-22mm)/2mm

ASSEMBLY OF SIDE AND BACK CLOSURE PROFILES AND SLIDING PROFILES

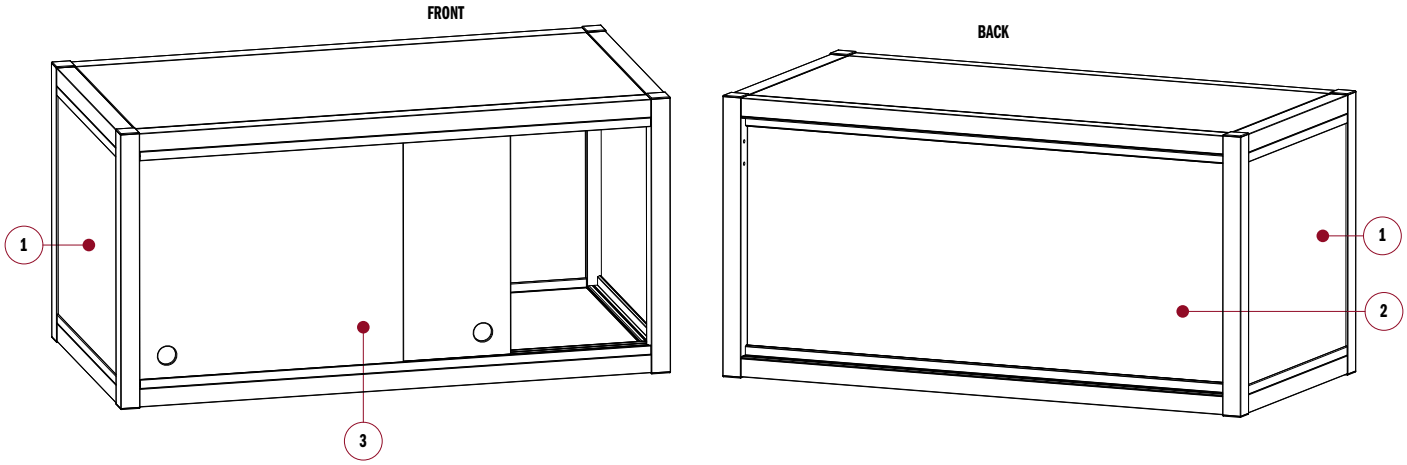

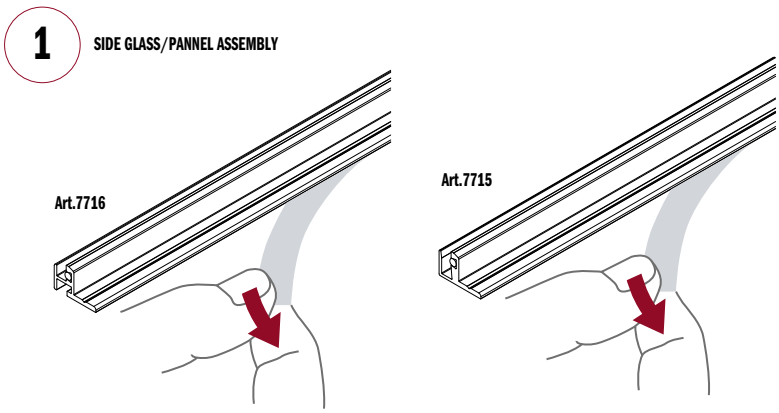

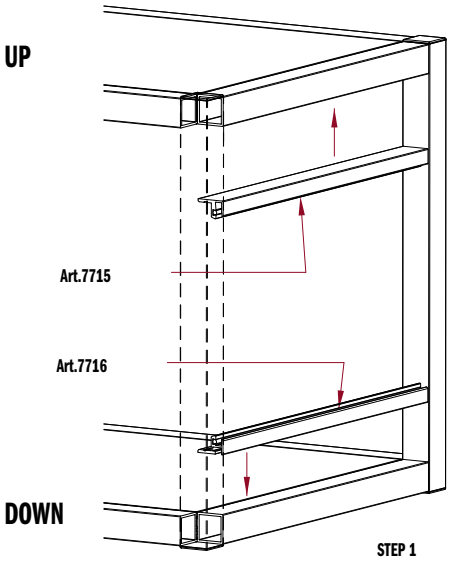

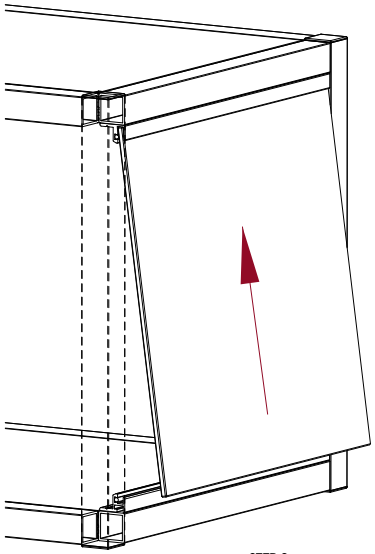

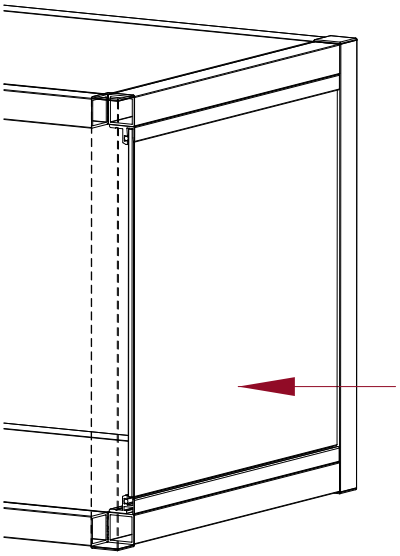

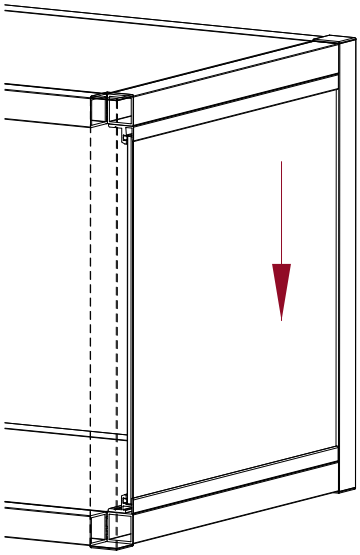

2 BACK GLASS/PANNEL ASSEMBLY

STEP 1

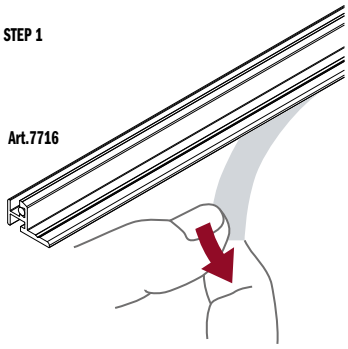

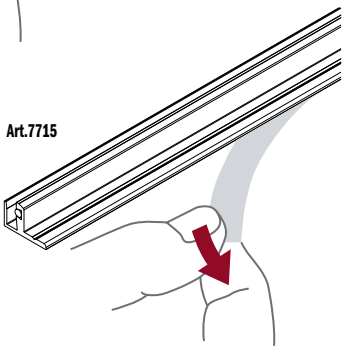

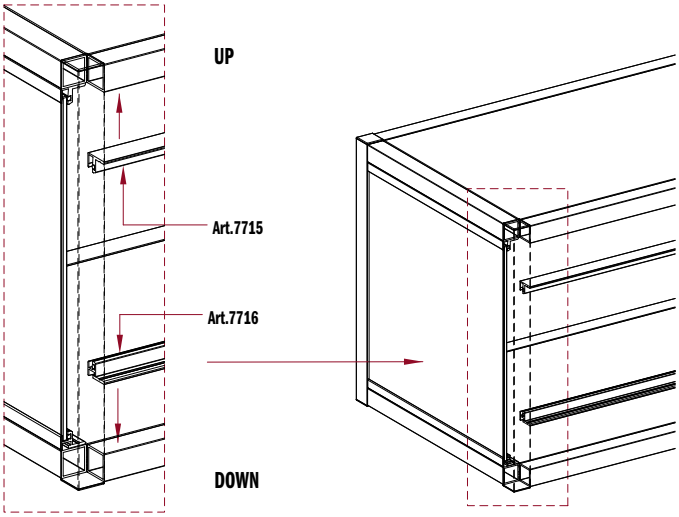

STEP 2

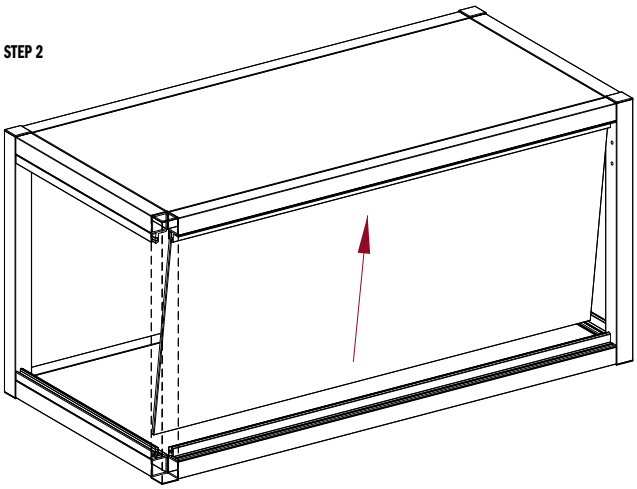

STEP 3

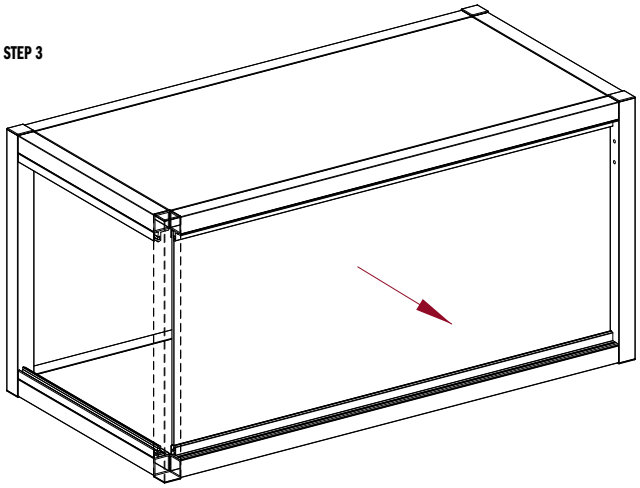

STEP 4

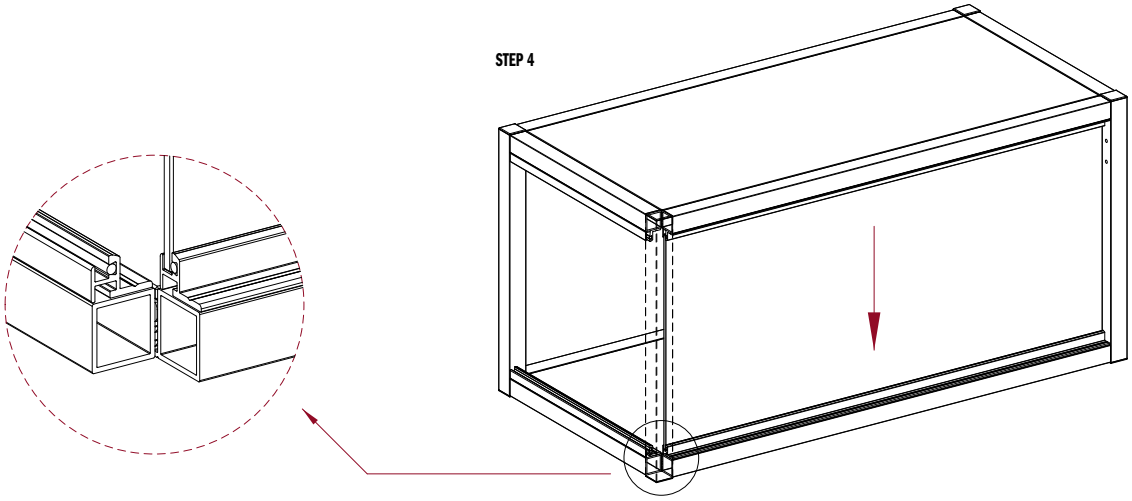

3 FRONT SLIDING GLASS/PANNEL ASSEMBLY

STEP 1

UP

DOWN

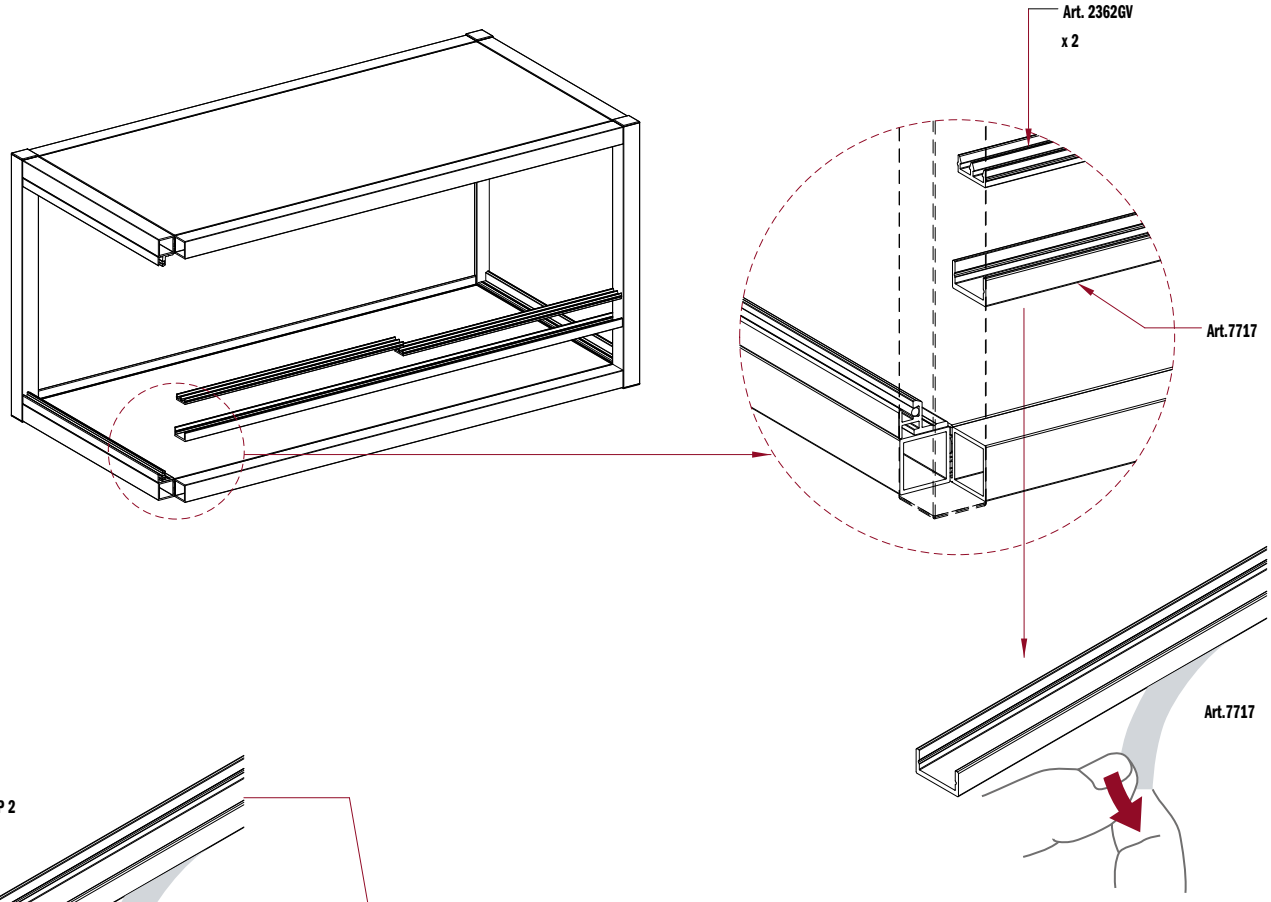

STEP 2

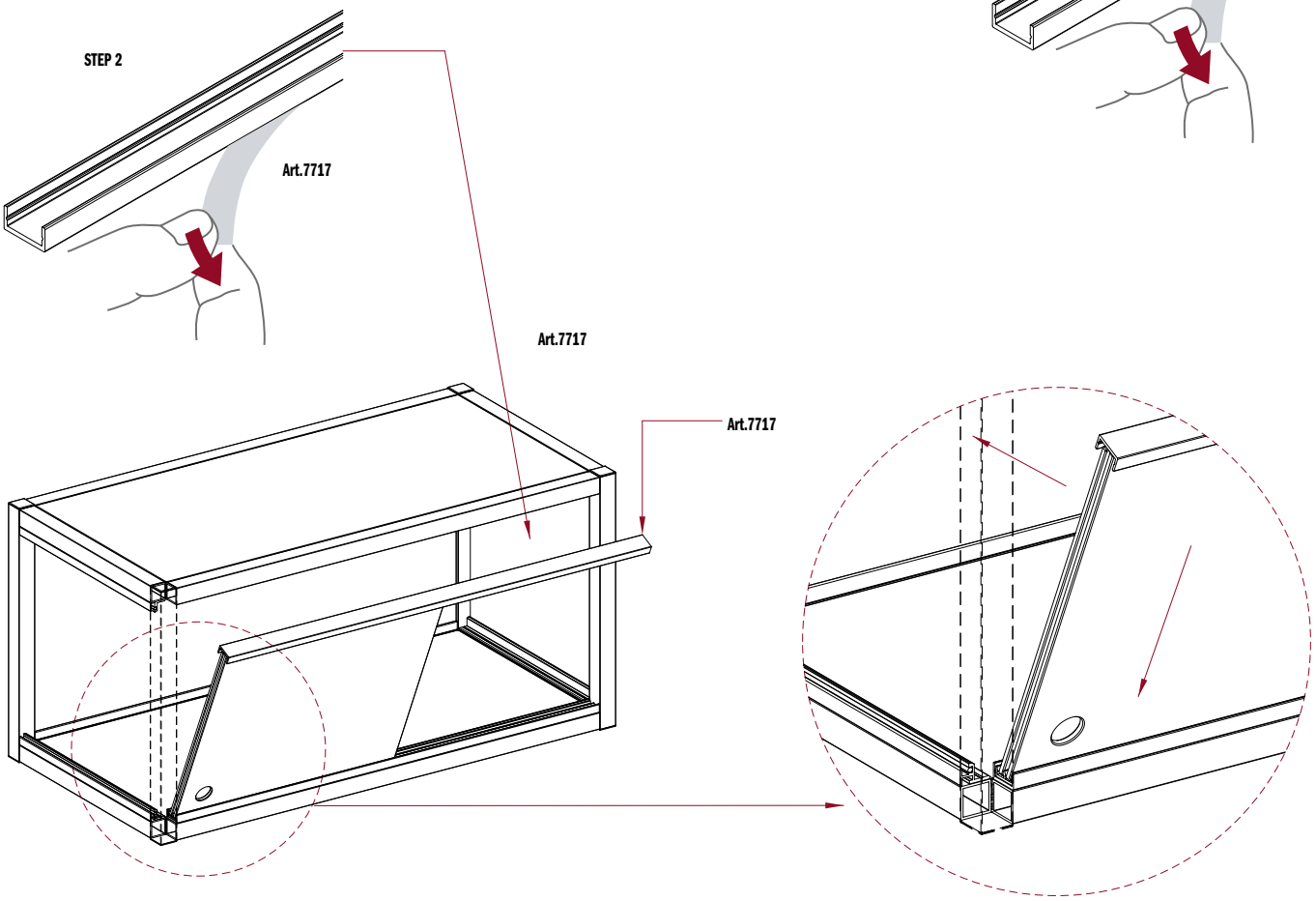

STEP 3

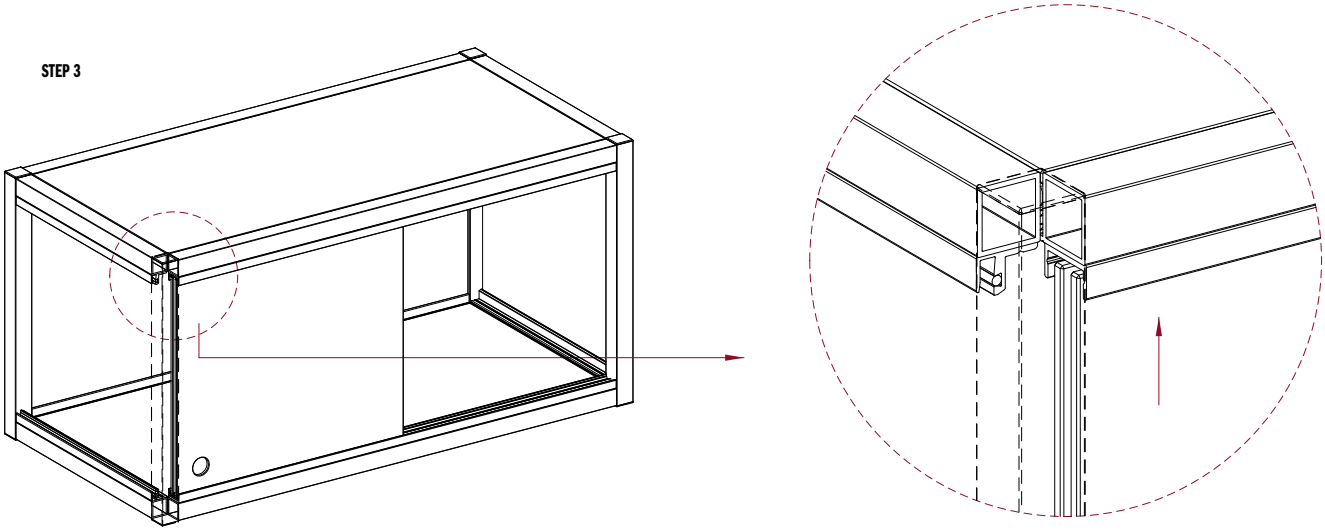

STEP 4

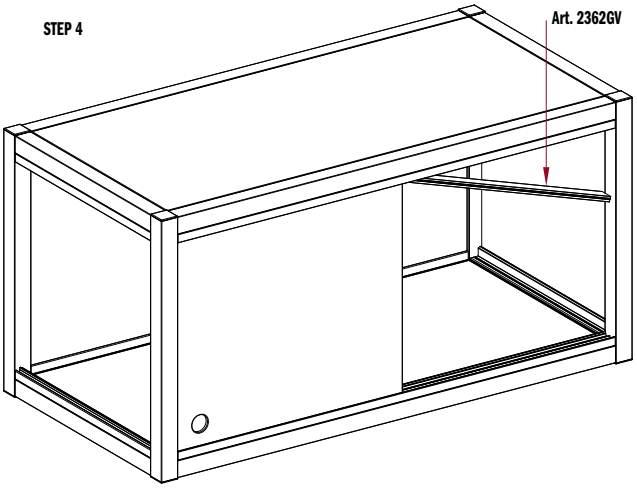

STEP 5

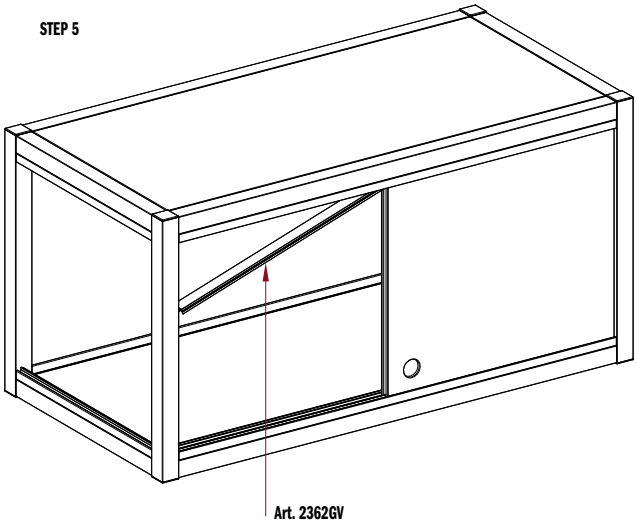

To better lock the profiles 7715; 7716; 7717 to the structure, screws can be used.

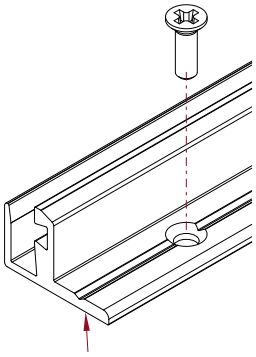

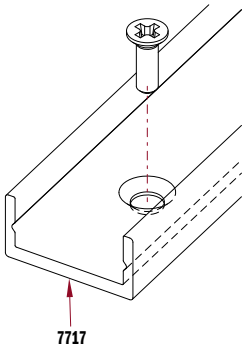

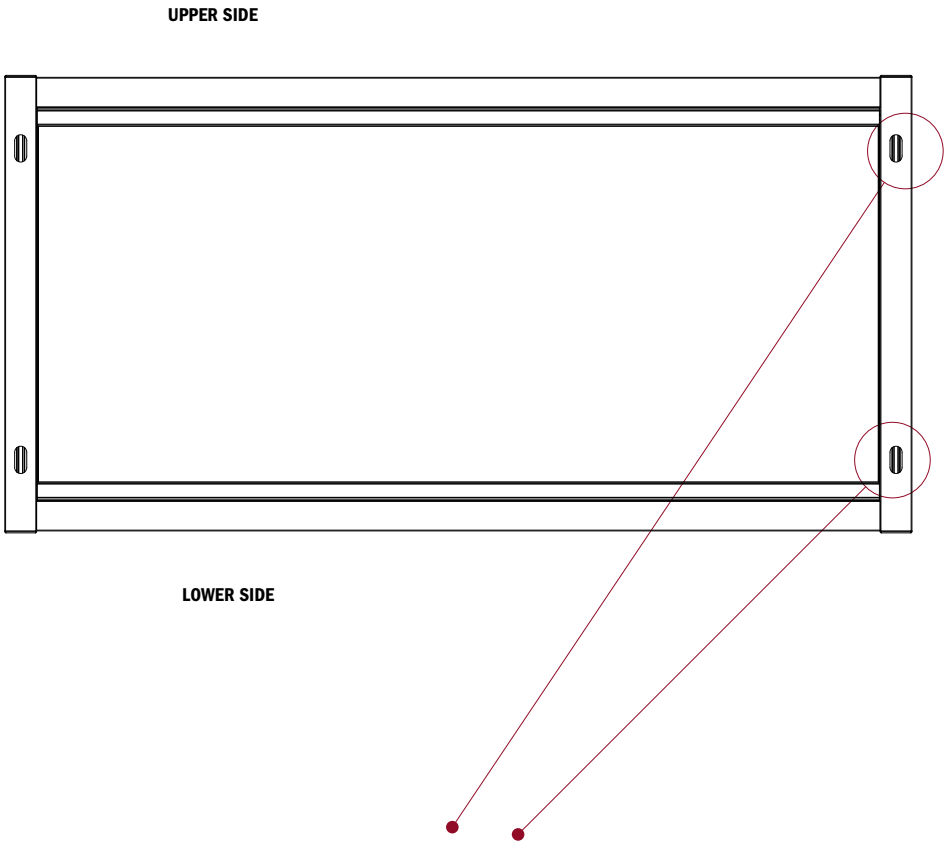
UPPER SIDE
LOWER SIDE

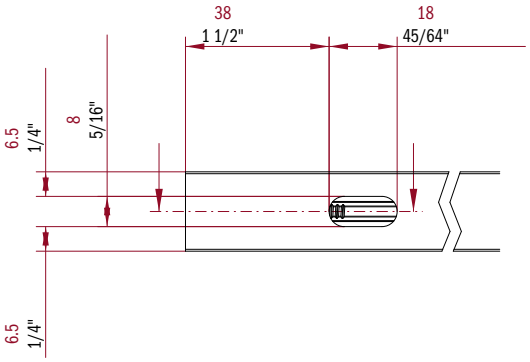
38
1 1/2"
18
45/64"
6.5
1/4"
8
5/16"
6.5
1/4"

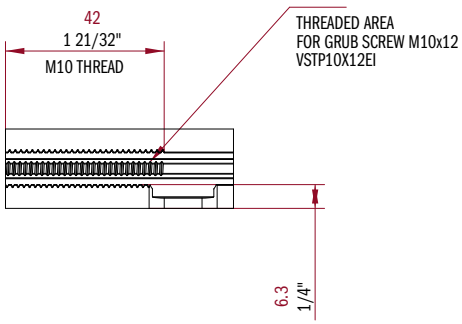
42
1 21/32"
M10 THREAD
THREADED AREA
FOR GRUB SCREW M10x12
VSTP10X12EI
6.3
1/4"

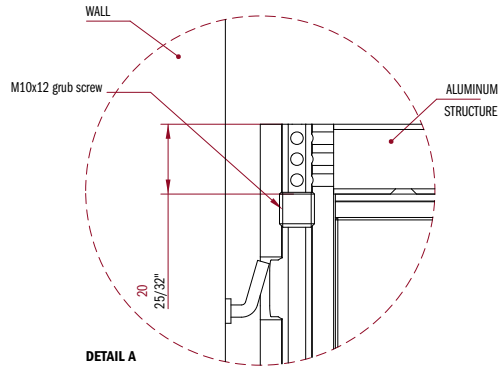

DETAIL A

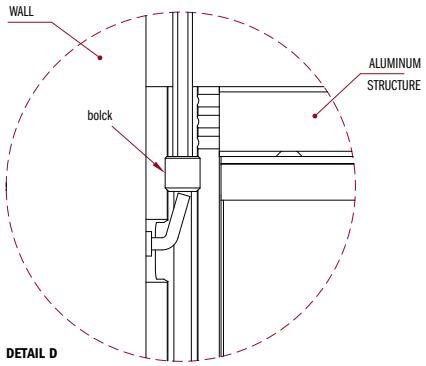

DETAIL D

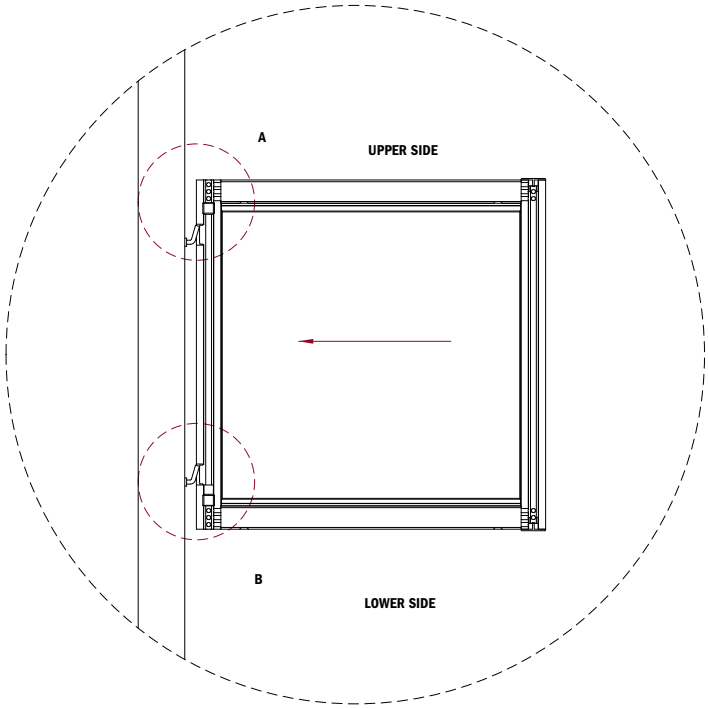

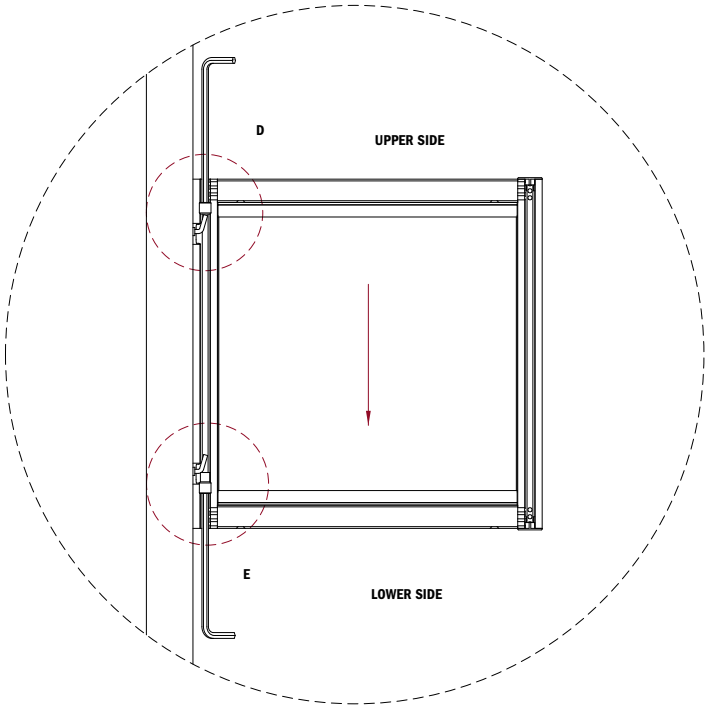

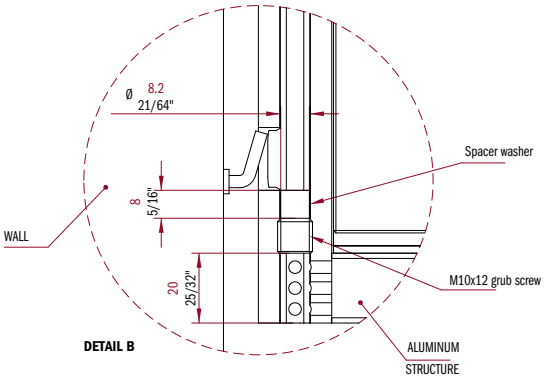

DETAIL B

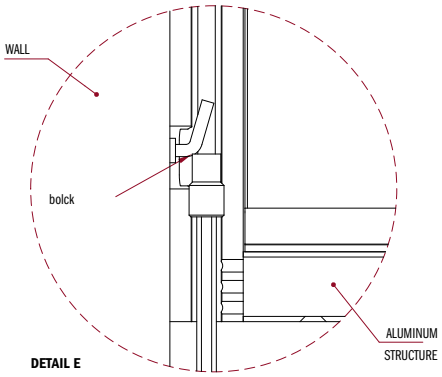

DETAIL E

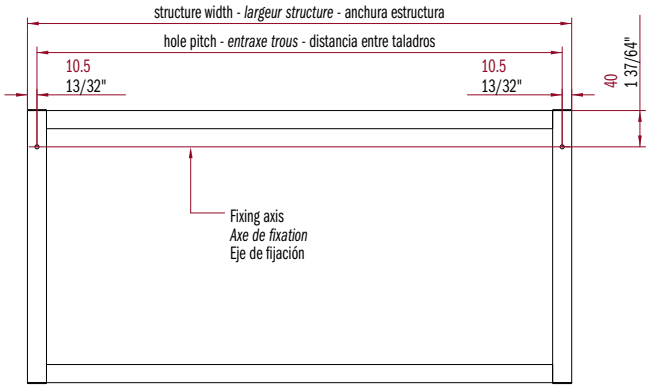

Drill through holes, diameter 4.5 mm, on the 7711 profile in the position shown on the drawing.

Effectuer des trous de passage diam 4.5 mm sur le profil 7711 dans la position indiquée sur le dessin

Realizar taladros pasantes de ø 4.5 mm en el perfil 7711 en la posición que muestra el dibujo

Choose the type of hole to be drilled TYPE A or TYPE B depending on the fixing screw used.

Choisir la typologie de perçage TYPE A ou TYPE B selon la vis de fixation utilisée

Elegir el tipo de taladro TIPO A o TIPO B según el tornillo de fijación utilizado

TYPE A - Countersunk hole. Visible screw. No adjustment possible. Secure fixing to the wall.

TYPE A *- Trou fraisé Vis visibles. Aucun ajustement possible. Fixation solidaire de la paroi*

TIPO A – Taladro avellanado. Tornillo a vista. No es posible regular. Fijación integrada en la pared

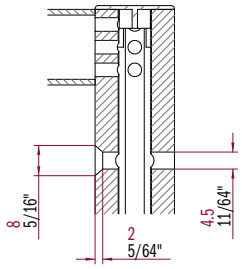

TYPE B - Double diameter hole. Invisible screw. Visible hole diameter 8 mm. Total adjustment 1 mm. Secure fixing to the wall.

TYPE B *- Trou diamètre double Vis non visibles. Trou diam.8 visible. Ajustement total 1 mm. Fixation solidaire de la paroi*

TIPO B – Taladro doble diámetro. Tornillo a vista. Taladro ø 8 a vista. Regulación total 1 mm. Fijación integrada en la pared

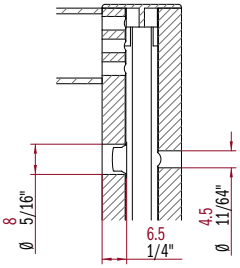

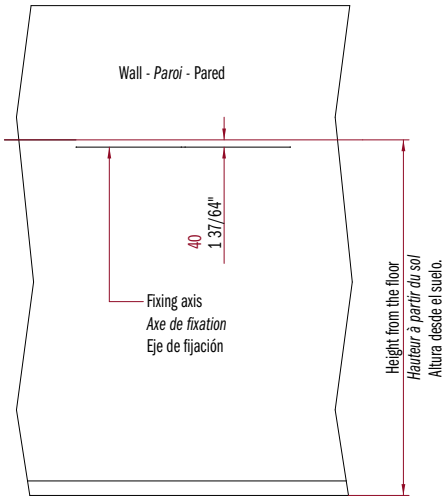

1 - mark the height of the structure on the wall.
2 - mark the Fixing Axis and the hole pitch.
3 - Drill the hole in the wall.

1 - marquer sur la paroi la hauteur de la structure.
2 - marquer l'axe de fixation et l'entraxe des trous.
3 - percer la paroi.

1 – marcar en la pared la altura de la estructura.
2 - marcar el Eje de fijación y distancia entre taladros.
3 - taladrar la pared.

To drill the double diameter hole:
Step1 - drill the through hole with diameter 4.5 mm.
Step2 - drill the hole with diameter 8 mm D. 6.5 mm

Pour réaliser le trou diamètre double.
Étape 1 - effectuer le trou de passage diam. 4.5 mm.
Étape 2 - effectuer le trou diam. 8 mm profond 6.5 mm

Para realizar el taladro doble diámetro.
Paso 1 – hacer un taladro pasante ø 4.5 mm.
Paso 2 - hacer un taladro ø 8 mm profundo 6.5 mm

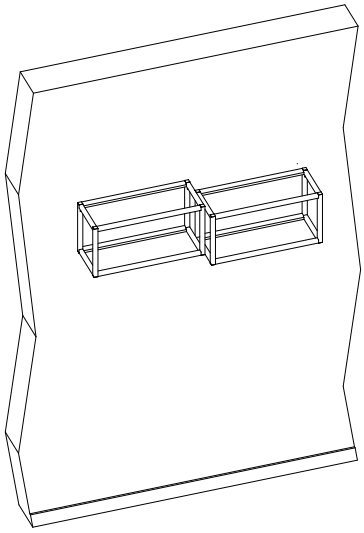

TYPE A - Countersunk hole.
1 - Align the structure with the wall near the holes.
2 - Tighten the screw until the structure is fixed to the wall.

TYPE A *- Trou fraisé.*
1 - positionner la structure sur la paroi à proximité des trous.
2 - visser la vis jusqu'au blocage de la structure sur la paroi

TIPO A – Taladro avellanado.
1 - colocar la estructura en la pared haciendo coincidir con los taladros.
2 – apretar el tornillo hasta que la estructura quede fijada a la pared

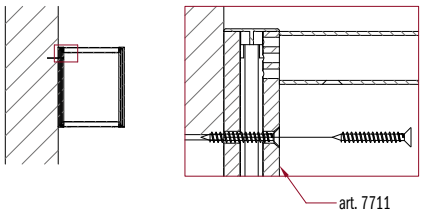

TYPE B - double diameter hole.
1 - Align the structure with the wall near the holes.
2 - Tighten the screw until the structure is fixed to the wall.

TYPE B *- trou diamètre double*
1 - positionner la structure sur la paroi à proximité des trous.
2 - visser la vis jusqu'au blocage de la structure sur la paroi

TIPO B – Taladro doble diámetro.
1 - colocar la estructura en la pared haciendo coincidir con los taladros.
2 – apretar el tornillo hasta que la estructura quede fijada a la pared

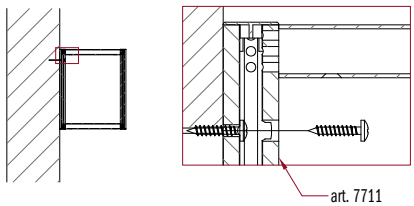

IMPORTANT: to cover the head of the screw or the hole diameter 8 mm, apply adhesive cover caps (not included).

Attention *: pour couvrir la tête de la vis ou le trou diam. 8 mm, appliquer des caches trous adhésifs (non inclus)*

Atención: para cubrir la cabeza del tornillo o el taladro ø 8 mm aplicar los embellecedores para tornillos adhesivos (no incluidos)

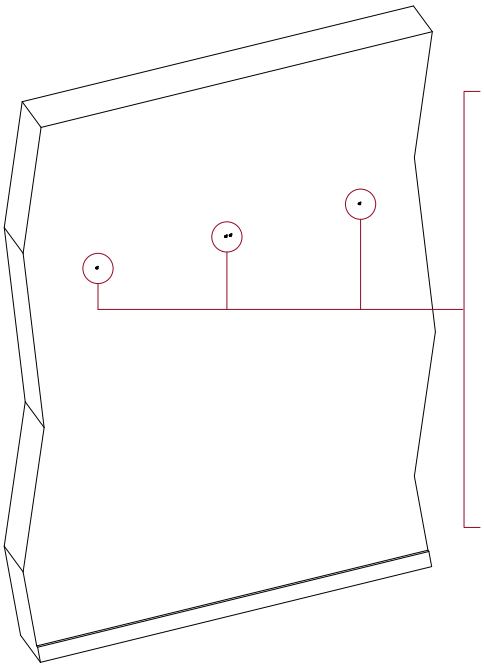

9mm - 13mm
3/8" - 1/2"
Drywall or Board

16mm - 19mm
5/8" - 3/4"
Drywall or Board

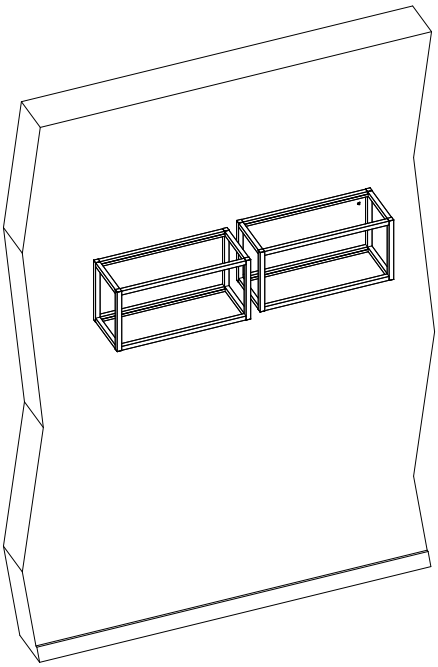

Drill a hole in the wall using a 6 mm diameter drill bit to a minimum of D. 40 mm. Insert the dowel into the hole. Fix the hook to the dowel

Forer le mur avec une pointe diam. 6 mm sur une profondeur de minimum 40 mm. Insérer la cheville dans le trou. Fixer le crochet sur la cheville.

Taladrar la pared con una broca de ø 6 mm y una profundidad mínima de 40 mm. Introducir el taco en el taladro. Fijar el gancho en el taco.

Supporting materials: concrete. Solid or semi-solid bricks. Solid block or light cable concrete. Aerated concrete. Plasterboard. Natural stone. Chipboard panel. Solid gypsum panel.

Matériaux de support : béton Brique pleine ou perforée Bloc plein ou cavité en béton de granulats légers. Béton cellulaire. Placoplâtre. Pierre naturelle. Panneau de copeaux. Panneau plein en plâtre.

Materiales de soporte: Hormigón. Ladrillo macizo o perforado. Bloque macizo o hueco de hormigón ligero. Hormigón celular. Placas de yeso laminado. Piedra natural. Panel de aglomerado. Panel macizo de escayola.

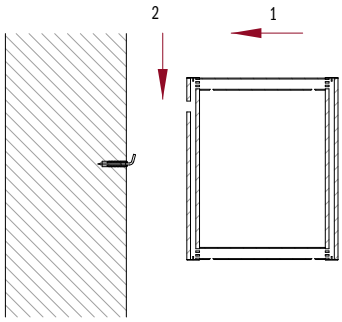

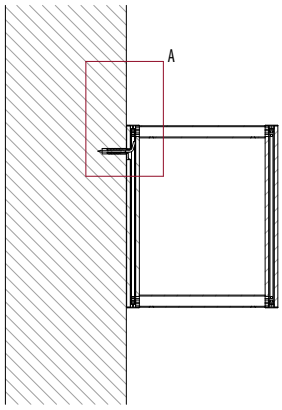

5 mm hexagonal male wrench
(not supplied)

Clé mâle hexagonale 5 mm
(non fournie)

Llave macho hexagonal 5 mm
(no incluida)

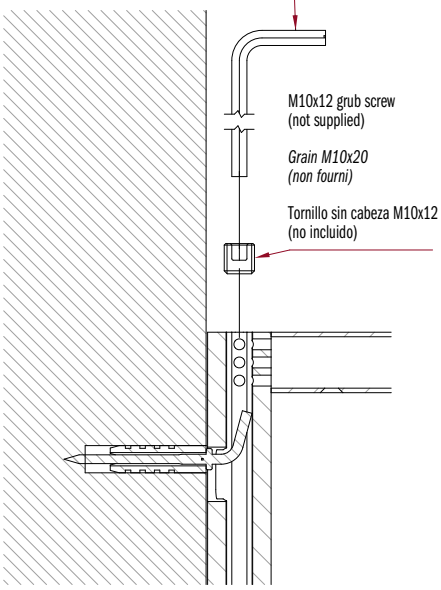

M10x12 grub screw
(not supplied)

Grain M10x20
(non fourni)

Tornillo sin cabeza M10x12
(no incluido)

DETAIL A

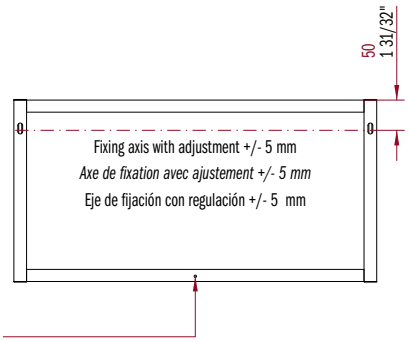

Once adjusted, the structure must be secured to the wall with a normal screw in the hole made in the crossbar.

Une fois le relevé effectué, la structure est mise sur la paroi en utilisant une vis normale dans le trou se trouvant sur la traverse

Al concluir el registro, la estructura se debe fijar a la pared utilizando un tornillo normal en el agujero hecho en el larguero.

WE MAKE THE DIFFERENCE IN THE KITCHEN

ALUMINIUM STRUCTURES FOR CABINETS

ALUMINUM STRUCTURE FOR BASE CABINETS

Why...
A different way to install base cabinets

- Easily manufactured and assembled
- Quick to install
- Adjustable leg heights and positions
- A modular system for every dimension needed

ALUMINUM STRUCTURE FOR BASE CABINETS

Pourquoi...
Une autre façon d'installer des armoires

- *Facilement fabriqués et assemblés*
- *Rapide à installer*
- *Pied réglable en hauteur et positions*
- *Un système modulaire pour toutes les dimensions nécessaires*

ESTRUCTURA DE ALUMINIO PARA ARMARIOS

Por qué...
Una forma diferente de instalar los muebles

- Rápido y fácil de instalar
- Patas regulables
- Estructura ultra-fuerte para las soluciones de gran peso
- Un sistema modular para cada necesidad y dimensión

How...
Manufacturing Specifications

Comment...
Spécifications de Fabrication

Cómo...
Especificaciones de Fabricación

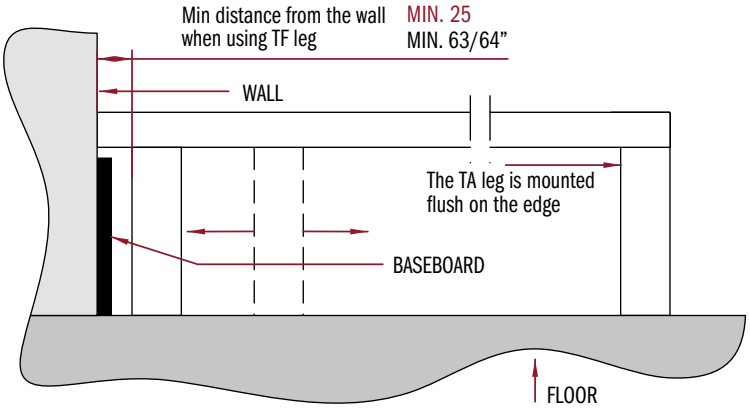

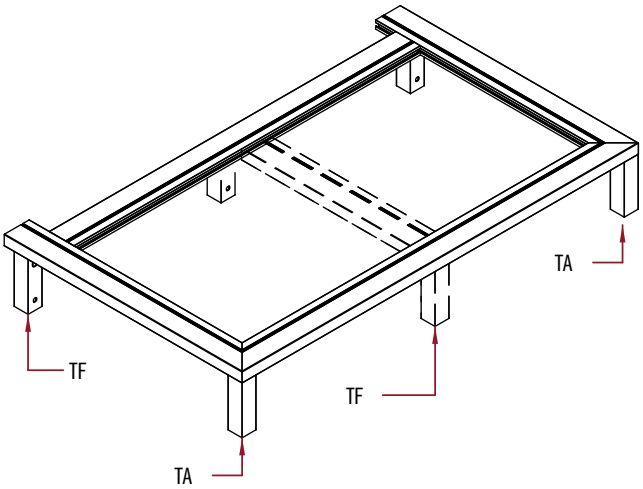

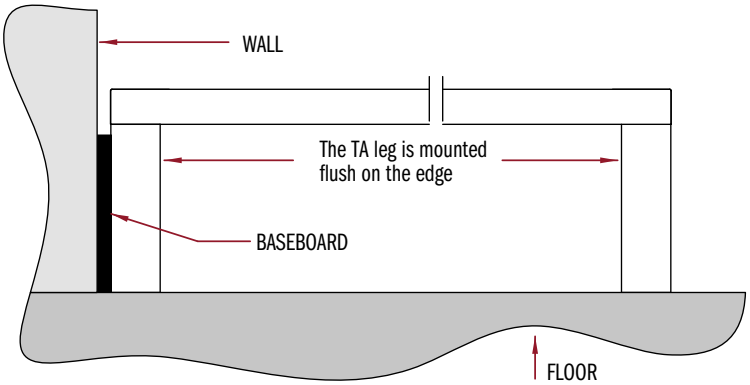

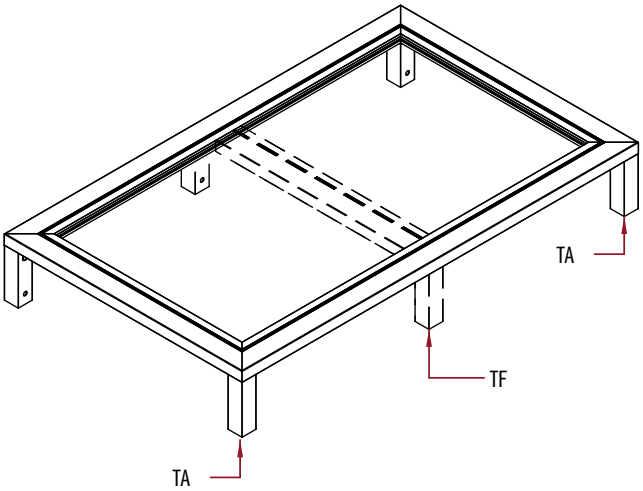

Technical Specifications...
- Material: Aluminum
- Performance: Heavy-duty structure, great solution for heavy cabinets
- Environment: 100% recyclable materials

Spécifications Techniques...
- *Matériel: Aluminium*
- *Performance: Structure très robuste, solution idéale pour les armoires lourdes*
- *Environnement: Matériaux 100% recyclables*

Especificaciones Técnicas...
- Material: Aluminio
- Rendimiento: Estructura muy robusta, solución idéale para armarios pesados
- Medio Ambiente: 100% de Material reciclable

ALUMINUM STRUCTURES FOR CABINETS

STRUCTURES EN ALUMINIUM POUR ARMOIRES

ESTRUCTURAS DE ALUMINIO PARA ARMARIOS

6565

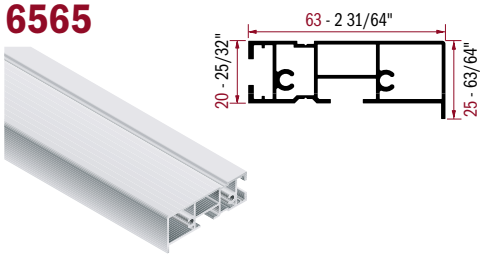

ALUMINUM PROFILE FOR BASE FRAME SYSTEM 6500
50S Aluminum Clear Anodize
Other Colors and Lengths Available FROM ITALY

PROFILÉ EN ALUMINIUM POUR SYSTÈME DE CADRE DE BASE 6500
50S Aluminium Clair Anodisé
Autres Couleurs et Longueurs Disponibles DE L'ITALIE

PERFIL DE ALUMINIO PARA BASTIDOR BASE 6500
50S Aluminio Anodizado Claro
Otros Colores y Dimensiones Disponibles DE ITALIA

COLORS	ITEM NUMBER	LENGTH		PCS PER BOX	BOX DIMENSION		BOX WEIGHT		STOCK IN AMERICA MSRP PRICING USD			
					mm	inch						
		mm	inch		W x D x H	W x D x H	KG	LB	METER	FOOT	EACH	BOX
50S	U656550SL27	2670	105 1/8"	10	2740 x 205 x 110	107 7/8" x 8 1/8" x 4 3/8"	23.50	51.81	25.474	7.764	68.016	680.156
50S	U656550SL39	3900	153 9/16"	10	4050 x 205 x 110	159 1/2" x 8 1/8" x 4 3/8"	34.00	74.96	24.994	7.618	97.477	974.766

K7541TA

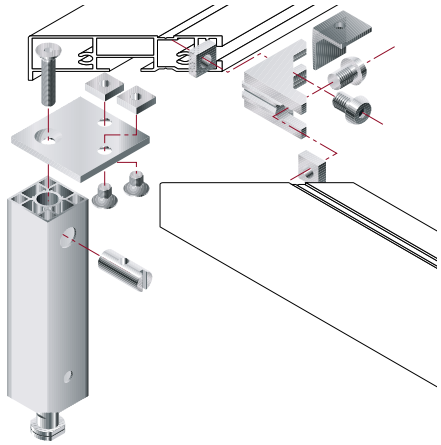

ALUMINUM LEG KIT FOR BASE FRAME SYSTEM 6500
Terminal Position
Complete Assembly Kit for 2 Legs and 2 Corners
50S Aluminum Clear Anodize
Other Colors and Sizes Available FROM ITALY

ENSEMBLE DE PIED EN ALUMINIUM POUR SYSTÈME DE CADRE DE BASE 6500
Position Terminal
Ensemble Complet pour Assembler 2 Pieds et 2 Coins
50S Aluminium Clair Anodisé
Autres Couleurs et Longueurs Disponibles DE L'ITALIE

KIT DE PATAS DE ALUMINIO PARA BASES DE BASTIDOR SISTEMA 6500
Posicion Final
Sistema Completo de Union para Dos Patas y Dos Angulos
50S Aluminio Anodizado Claro
Otras Dimensiones y Colores Disponibles DE ITALIA

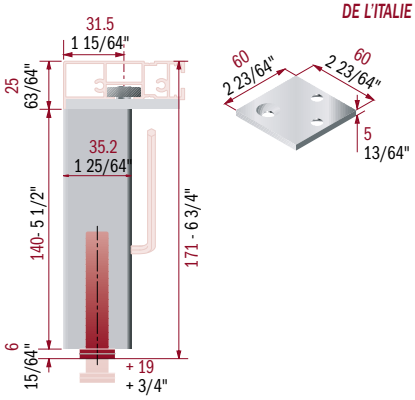

COLORS	ITEM NUMBER	KIT PER BOX	BOX DIMENSION		BOX WEIGHT		STOCK IN AMERICA MSRP PRICING USD	
			mm	inch				
			W x D x H	W x D x H	KG	LB	KIT	BOX
50S	UK7541TA50S03	1	150 x 70 x 65	5 7/8" x 2 3/4" x 2 1/2"	0.65	1.43	118.538	118.538

K7541TF

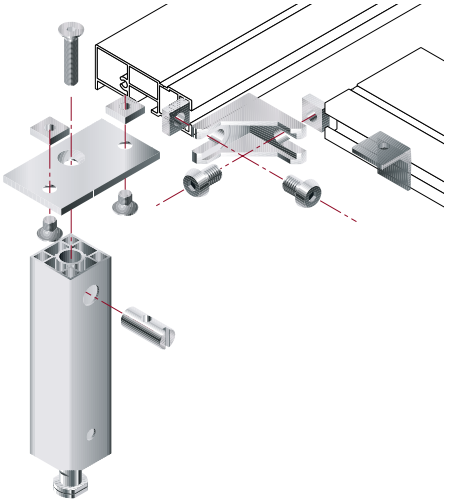

ALUMINUM LEG KIT FOR BASE FRAME SYSTEM 6500
Intermediate Position
Complete Assembly Kit for 2 Legs and 2 Corners
50S Aluminum Clear Anodize
Other Colors and Sizes Available FROM ITALY

ENSEMBLE DE PIED EN ALUMINIUM POUR SYSTÈME DE CADRE DE BASE 6500
Position Intermédiaire
Ensemble Complet pour Assembler 2 Pieds et 2 Coins
50S Aluminium Clair Anodisé
Autres Couleurs et Longueurs Disponibles DE L'ITALIE

KIT DE PATAS DE ALUMINIO PARA BASES DE BASTIDOR SISTEMA 6500
Posicion Intermedia
Sistema Completo de Union para Dos Patas y Dos Angulos
50S Aluminio Anodizado Claro
Otras Dimensiones y Colores Disponibles DE ITALIA

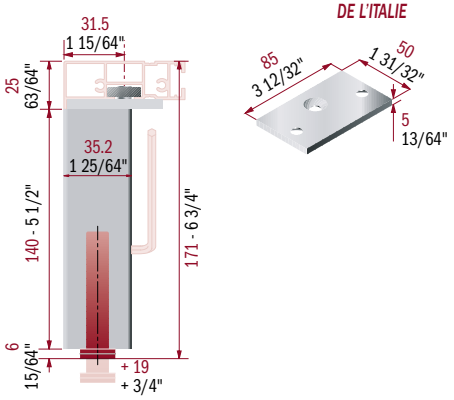

COLORS	ITEM NUMBER	KIT PER BOX	BOX DIMENSION		BOX WEIGHT		STOCK IN AMERICA MSRP PRICING USD	
			mm	inch				
			W x D x H	W x D x H	KG	LB	KIT	BOX
50S	UK7541TF50S03	1	150 x 70 x 65	5 7/8" x 2 3/4" x 2 1/2"	0.65	1.43	118.538	118.538

WE MAKE THE DIFFERENCE IN THE KITCHEN

STRIKE ALUMINUM SHELVING SYSTEM

STRIKE

"Strike" is an innovative system for creating aluminum shelves for cabinets and closets.
The "no tool" assembly joints system allows you to build shelves in just a few minutes.
Every lateral profile is designed to receive a plastic insert that fits perfectly onto the shelf holders.

The "Strike" system can also be assembled as a lighted version with LED strips, not included.
This enables you to provide lighted shelves which illuminate the closet thus not having to install any secondary light.
Every shelf can support more than 88 lbs (40 kgs).

STRIKE

"Strike" est un système innovateurs pour la création d'étagères en aluminium pour les armoires et les placards. Le système de joint d'assemblage "pas d'outil" vous permet de construire des étagères dans quelques minutes. Chaque profilé latéral est conçu pour recevoir un insert en plastique qui s'adapte parfaitement sur les supports d'étagère.

Le système "Srtike" peut également être assemblé en version éclairé avec bandes de LED, non incluses.
Cela vous permet de fournir des d'étagères éclairées qui illuminent le placard donc il n'est pas nécessaire d'installer un éclairage secondaire.
Chaque d'étagère peut supporter plus de 88 lbs (40 kg).

STRIKE

"Strike", es un innovador sistema de estanterías de aluminio para la creación de muebles, estanterias y armarios.
El sistema de montage "sin herramientas" permiten construir una plataforma en pocos minutos.
Todos los perfiles laterales llevan un canal donde se inserta un soporte en plástico que se adapta a todas las medidadas de loss soportes de balda.

El sistema "Strike" también puede ser ensamblado como una versión iluminada con bandas LED (no incluidas)
Esto permite el suministro de repisas que iluminen el closet y así no tener que instalar ninguna luz secundaria.
Cada repisa puede soportar 88 lb (40 kg)

LATINI
SENATORE CAPPELLI
GANROG
GANROG
FONTE
CRISTALLIA

6582G (❶)

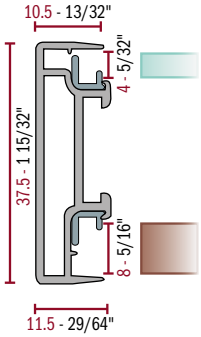

"STRIKE 37" ALUMINUM SHELVING SYSTEM

"STRIKE 37" FRONT/REAR ALUMINUM PROFILE FOR SHELF
50S Aluminum Clear Anodize
Other Colors Available FROM ITALY

(❶) ONE GASKET INCLUDED
ADDITIONAL GASKET AVAILABLE

"STRIKE 37" SYSTÈME D'ÉTAGÈRES EN ALUMINIUM

"STRIKE 37" PROFILÉ AVANT/ARRIERE EN ALUMINIUM POUR ÉTAGÈRE
50S Aluminium Clair Anodisé
Autres Couleurs Disponibles DE L'ITALIE

(❶) *UN JOINT D'ÉTANCHÉITÉ INCLUS*
JOINT D'ÉTANCHÉITÉ ADDITIONNEL DISPONIBLE

"STRIKE 37" DE ALUMINIO SISTEMA DE ESTANTERÍA

PERFIL DELANTERO/TRASERO "STRIKE 37" EN ALUMINIO PARA BALDA
50S Aluminio Anodizado Claro
Otros Colores Disponibles DE ITALIA

(❶) UNA GUARNICION INCLUIDA
GUARNICION ADICIONAL DISPONIBLE

COLORS	ITEM NUMBER	LENGTH		PCS PER BOX	BOX DIMENSION		BOX WEIGHT		STOCK IN AMERICA MSRP PRICING USD			
					mm	inch						
		mm	inch		W x D x H	W x D x H	KG	LB	METER	FOOT	EACH	BOX
50S	U6582G50SL27	2670	105 1/8"	10	2740 x 95 x 65	107 7/8" x 3 3/4" x 2 1/2"	10.00	22.05	15.051	4.588	40.186	401.862
50S	U6582G50SL41	4100	161 7/16"	10	4250 x 95 x 65	167 3/8" x 3 3/4" x 2 1/2"	16.80	37.04	14.393	4.387	59.011	590.113

6581

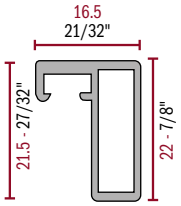

"STRIKE" LATERAL ALUMINUM PROFILE FOR SHELF
50S Aluminum Clear Anodize
Other Colors Available FROM ITALY

"STRIKE" PROFILÉ LATÉRAL EN ALUMINIUM POUR ÉTAGÈRE
50S Aluminium Clair Anodisé
Autres Couleurs Disponibles DE L'ITALIE

PERFIL LATERAL "STRIKE" PARA BALDA
50S Aluminio Anodizado Claro
Otros Colores Disponibles DE ITALIA

COLORS	ITEM NUMBER	LENGTH		PCS PER BOX	BOX DIMENSION		BOX WEIGHT		STOCK IN AMERICA MSRP PRICING USD			
					mm	inch						
		mm	inch		W x D x H	W x D x H	KG	LB	METER	FOOT	EACH	BOX
50S	U658150SL27	2670	105 1/8"	10	2740 x 95 x 65	107 7/8" x 3 3/4" x 2 1/2"	7.50	16.53	10.947	3.337	29.228	292.285
50S	U658150SL41	4100	161 7/16"	10	4250 x 95 x 65	167 3/8" x 3 3/4" x 2 1/2"	13.00	28.66	10.457	3.187	42.874	428.737

6608

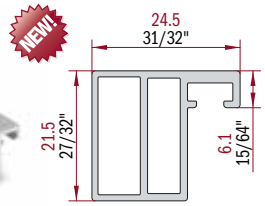

"STRIKE" LATERAL ALUMINUM PROFILE FOR SHELF
50S Aluminum Clear Anodize
Other Colors Available FROM ITALY

"STRIKE" PROFILÉ LATÉRAL EN ALUMINIUM POUR ÉTAGÈRE
50S Aluminium Clair Anodisé
Autres Couleurs Disponibles DE L'ITALIE

PERFIL LATERAL "STRIKE" PARA BALDA
50S Aluminio Anodizado Claro
Otros Colores Disponibles DE ITALIA

COLORS	ITEM NUMBER	LENGTH		PCS PER BOX	BOX DIMENSION		BOX WEIGHT		STOCK IN AMERICA MSRP PRICING USD			
					mm	inch						
		mm	inch		W x D x H	W x D x H	KG	LB	METER	FOOT	EACH	BOX
50S	U660850SL27 - -	2670	105 1/8"	10	2740 x 95 x 65	107 7/8" x 3 3/4" x 2 1/2"	7.50	16.53	18.088	5.513	48.295	482.950
50S	U660850SL41 - -	4100	161 7/16"	10	4250 x 95 x 65	167 3/8" x 3 3/4" x 2 1/2"	13.00	28.66	17.402	5.304	71.348	713.482

NEW! NEW DESIGN WILL REPLACE CURRENT DESIGN WHEN CURRENT DESIGN INVENTORY IS OVER

CFT6580 03

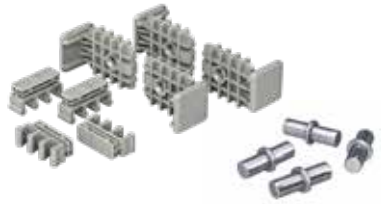

JUNCTION AND HOLDER KIT FOR "STRIKE" SHELF
Junction CFT6580/01 (8pcs) + Holder CFT6580/02 (4pcs)

ENSEMBLE DE JONCTION ET SUPPORT POUR ÉTAGÈRE "STRIKE"
Jonction CFT6580/01 (8pcs) + Support CFT6580/02 (4pcs)

KIT DE UNION Y SOPORTE DE BALDA PARA STRIKE
Union CFT6580/01 (8pcs) + Soporte VFT6580/02 (4pcs)

COLORS	ITEM NUMBER	KIT PER BOX	BOX DIMENSION mm	BOX DIMENSION inch	BOX WEIGHT		STOCK IN AMERICA MSRP PRICING USD	
			W x D x H	W x D x H	KG	LB	KIT	BOX
	UCFT6580/03	20	220 x 165 x 140	8 5/8" x 6 1/2" x 5 1/2"	1.00	2.20	7.346	146.920

2357AGV

REPLACEMENT GASKET FOR ALUMINUM DOOR PROFILE
for 4 mm glass

JOINT D'ÉTANCHÉITÉ DE REMPLACEMENT POUR PROFILÉ EN ALUMINIUM DE PORTE

GUARNICION PARA PERFILES DE ALUMINIO PARA PUERTAS

ITEM NUMBER	LENGTH mm	LENGTH inch	PCS PER BOX	BOX DIMENSION mm	BOX DIMENSION inch	BOX WEIGHT		STOCK IN AMERICA MSRP PRICING USD			
				W x D x H	W x D x H	KG	LB	METER	FOOT	EACH	BOX
UR2357AGV.01	1283	50 1/2"	50	1330 x 95 x 65	52 3/8" x 3 3/4" x 2 1/2"	11.00	24.25	3.896	1.188	4.999	249.928

2364AGV

REPLACEMENT GASKET FOR ALUMINUM DOOR PROFILE
for 3 mm glass

JOINT D'ÉTANCHÉITÉ DE REMPLACEMENT POUR PROFILÉ EN ALUMINIUM DE PORTE

GUARNICION PARA PERFILES DE ALUMINIO PARA PUERTAS

ITEM NUMBER	LENGTH mm	LENGTH inch	PCS PER BOX	BOX DIMENSION mm	BOX DIMENSION inch	BOX WEIGHT		STOCK IN AMERICA MSRP PRICING USD			
				W x D x H	W x D x H	KG	LB	METER	FOOT	EACH	BOX
UR2364AGV.01	1283	50 1/2"	50	1330 x 95 x 65	52 3/8" x 3 3/4" x 2 1/2"	11.00	24.25	3.896	1.188	4.999	249.928

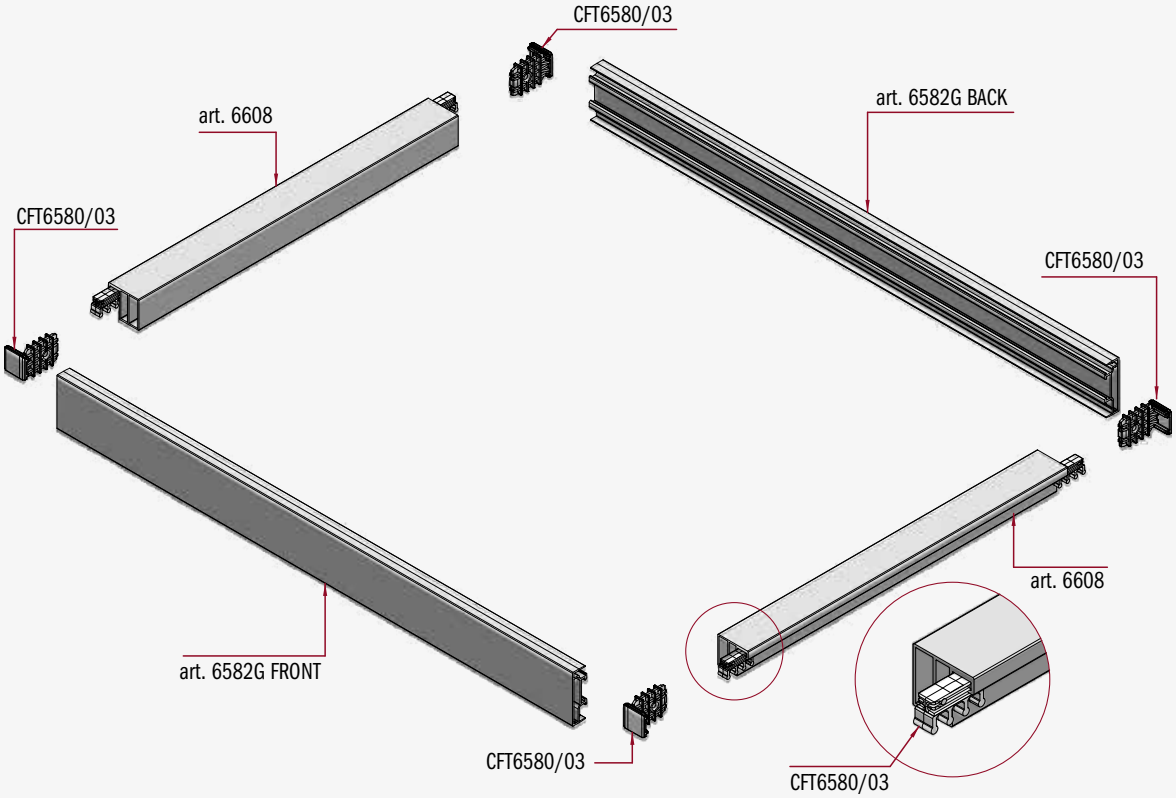

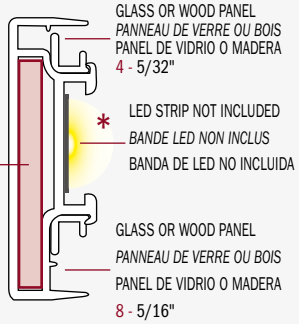

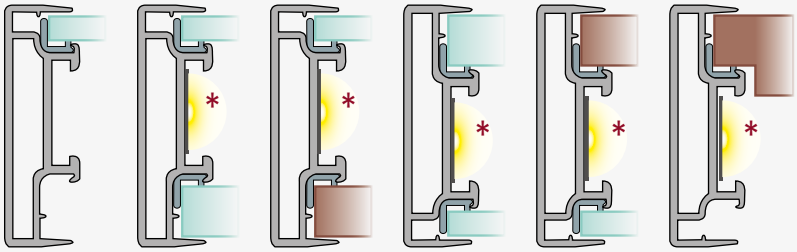

* SUGGESTED IDEAS – LED AND REINFORCING STEEL BAR NOT INCLUDED
IDÉES SUGGÉRÉE - LED ET BARRE RENFORCER NON INCLUS
IDEAS SUGERIDAS – LED Y BARRA DE REFUERZO EN ACERO NO INCLUIDAS

"STRIKE 28" ALUMINUM SHELVING SYSTEM

"STRIKE 28" SYSTÈME D'ÉTAGÈRES EN ALUMINIUM

"STRIKE 28" DE ALUMINIO SISTEMA DE ESTANTERÍA

6583G - OPEN (❶)

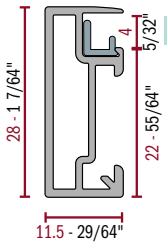

"STRIKE 28" FRONT ALUMINUM PROFILE FOR SHELF
50S Aluminum Clear Anodize
Other Colors Available FROM ITALY

(❶) ONE GASKET INCLUDED

"STRIKE 28" PROFILÉ AVANT EN ALUMINUM POUR ÉTAGÈRE
50S Aluminium Clair Anodisé
Autres Couleurs Disponibles DE L'ITALIE

(❶) *UN JOINT D'ÉTANCHÉITÉ INCLUS*

PERFIL DELANTERO "STRIKE 28" EN ALUMINIO PARA BALDA
50S Aluminio Anodizado Claro
Otros Colores Disponibles DE ITALIA

(❶) UNA GUARNICION INCLUIDA

COLORS	ITEM NUMBER	LENGTH		PCS PER BOX	BOX DIMENSION		BOX WEIGHT		STOCK IN AMERICA MSRP PRICING USD			
					mm	inch						
		mm	inch		W x D x H	W x D x H	KG	LB	METER	FOOT	EACH	BOX
50S	U6583G50SL41	4100	161 7/16"	10	4250 x 95 x 65	167 3/8" x 3 3/4" x 2 1/2"	14.00	30.86	13.247	4.038	54.313	543.127

6584G - CLOSED (❶)

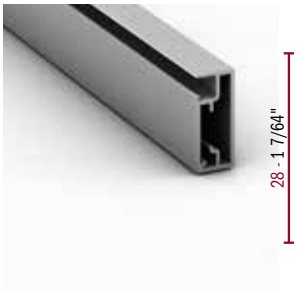

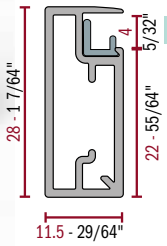

"STRIKE 28" REAR ALUMINUM PROFILE FOR SHELF
50S Aluminum Clear Anodize
Other Colors Available FROM ITALY

(❶) ONE GASKET INCLUDED

"STRIKE 28" PROFILÉ ARRIÈRE EN ALUMINUM POUR ÉTAGÈRE
50S Aluminium Clair Anodisé
Autres Couleurs Disponibles DE L'ITALIE

(❶) *UN JOINT D'ÉTANCHÉITÉ INCLUS*

PERFIL TRASERO "STRIKE 28" EN ALUMINIO PARA BALDA
50S Aluminio Anodizado Claro
Otros Colores Disponibles DE ITALIA

(❶) UNA GUARNICION INCLUIDA

COLORS	ITEM NUMBER	LENGTH		PCS PER BOX	BOX DIMENSION		BOX WEIGHT		STOCK IN AMERICA MSRP PRICING USD			
					mm	inch						
		mm	inch		W x D x H	W x D x H	KG	LB	METER	FOOT	EACH	BOX
50S	U6584G50SL41	4100	161 7/16"	10	4250 x 95 x 65	167 3/8" x 3 3/4" x 2 1/2"	15.00	33.07	13.639	4.157	55.920	559.199

6581

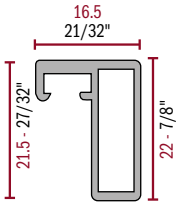

"STRIKE" LATERAL ALUMINUM PROFILE FOR SHELF
50S Aluminum Clear Anodize
Other Colors Available FROM ITALY

"STRIKE" PROFILÉ LATÉRAL EN ALUMINIUM POUR ÉTAGÈRE
50S Aluminium Clair Anodisé
Autres Couleurs Disponibles DE L'ITALIE

PERFIL LATERAL "STRIKE" PARA BALDA
50S Aluminio Anodizado Claro
Otros Colores Disponibles DE ITALIA

COLORS	ITEM NUMBER	LENGTH		PCS PER BOX	BOX DIMENSION		BOX WEIGHT		STOCK IN AMERICA MSRP PRICING USD			
					mm	inch						
		mm	inch		W x D x H	W x D x H	KG	LB	METER	FOOT	EACH	BOX
50S	U658150SL27	2670	105 1/8"	10	2740 x 95 x 65	107 7/8" x 3 3/4" x 2 1/2"	7.50	16.53	10.947	3.337	29.228	292.285
50S	U658150SL41	4100	161 7/16"	10	4250 x 95 x 65	167 3/8" x 3 3/4" x 2 1/2"	13.00	28.66	10.457	3.187	42.874	428.737

6608

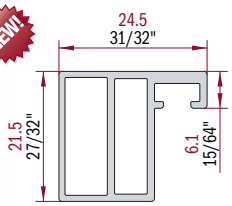

"STRIKE" LATERAL ALUMINUM PROFILE FOR SHELF
50S Aluminum Clear Anodize
Other Colors Available FROM ITALY

"STRIKE" PROFILÉ LATÉRAL EN ALUMINIUM POUR ÉTAGÈRE
50S Aluminium Clair Anodisé
Autres Couleurs Disponibles DE L'ITALIE

PERFIL LATERAL "STRIKE" PARA BALDA
50S Aluminio Anodizado Claro
Otros Colores Disponibles DE ITALIA

COLORS	ITEM NUMBER	LENGTH		PCS PER BOX	BOX DIMENSION		BOX WEIGHT		STOCK IN AMERICA MSRP PRICING USD			
					mm	inch						
		mm	inch		W x D x H	W x D x H	KG	LB	METER	FOOT	EACH	BOX
50S	U660850SL27 - -	2670	105 1/8"	10	2740 x 95 x 65	107 7/8" x 3 3/4" x 2 1/2"	7.50	16.53	18.088	5.513	48.295	482.950
50S	U660850SL41 - -	4100	161 7/16"	10	4250 x 95 x 65	167 3/8" x 3 3/4" x 2 1/2"	13.00	28.66	17.402	5.304	71.348	713.482

NEW! NEW DESIGN WILL REPLACE CURRENT DESIGN WHEN CURRENT DESIGN INVENTORY IS OVER

2357AGV

REPLACEMENT GASKET FOR ALUMINUM DOOR PROFILE
for 4 mm glass

JOINT D'ÉTANCHÉITÉ DE REMPLACEMENT POUR PROFILÉ EN ALUMINIUM DE PORTE

GUARNICION PARA PERFILES DE ALUMINIO PARA PUERTAS

ITEM NUMBER	LENGTH		PCS PER BOX	BOX DIMENSION		BOX WEIGHT		STOCK IN AMERICA MSRP PRICING USD			
				mm	inch						
	mm	inch		W x D x H	W x D x H	KG	LB	METER	FOOT	EACH	BOX
UR2357AGV.01	1283	50 1/2"	50	1330 x 95 x 65	52 3/8" x 3 3/4" x 2 1/2"	11.00	24.25	3.896	1.188	4.999	249.928

2364AGV

REPLACEMENT GASKET FOR ALUMINUM DOOR PROFILE
for 3 mm glass

JOINT D'ÉTANCHÉITÉ DE REMPLACEMENT POUR PROFILÉ EN ALUMINIUM DE PORTE

GUARNICION PARA PERFILES DE ALUMINIO PARA PUERTAS

ITEM NUMBER	LENGTH		PCS PER BOX	BOX DIMENSION		BOX WEIGHT		STOCK IN AMERICA MSRP PRICING USD			
				mm	inch						
	mm	inch		W x D x H	W x D x H	KG	LB	METER	FOOT	EACH	BOX
UR2364AGV.01	1283	50 1/2"	50	1330 x 95 x 65	52 3/8" x 3 3/4" x 2 1/2"	11.00	24.25	3.896	1.188	4.999	249.928

CFT6584 05

JUNCTION AND HOLDER KIT FOR "STRIKE" SHELF OPTION 1 (SEE DESIGN) "OPEN/CLOSED" WITH 6581

ENSEMBLE DE JONCTION ET SUPPORT POUR ÉTAGÈRE "STRIKE" OPTION 1 (VOIR DESIGN) "OUVERT/FERMÉ" AVEC 6581

CONJUNTO DE CONEXIONES Y SOPORTE "STRIKE" OPCIÓN 1 (VER DISEÑO) "ABIERTO / CERRADO" CON 6581

ITEM NUMBER	KIT PER BOX	BOX DIMENSION		BOX WEIGHT		STOCK IN AMERICA MSRP PRICING USD	
		mm	inch				
		W x D x H	W x D x H	KG	LB	KIT	BOX
UCFT6584/05	20	220 x 165 x 140	8 5/8" x 6 1/2" x 5 1/2"	1.00	2.20	4.145	82.900

CFT6584 06

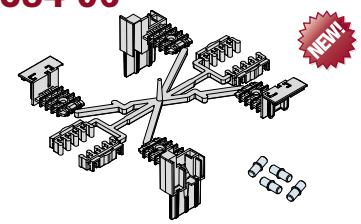

JUNCTION AND HOLDER KIT FOR "STRIKE" SHELF OPTION 1 (SEE DESIGN) "OPEN/CLOSED" WITH 6608

ENSEMBLE DE JONCTION ET SUPPORT POUR ÉTAGÈRE "STRIKE" OPTION 1 (VOIR DESIGN) "OUVERT/FERMÉ" AVEC 6608

CONJUNTO DE CONEXIONES Y SOPORTE "STRIKE" OPCIÓN 1 (VER DISEÑO) "ABIERTO / CERRADO" CON 6608

ITEM NUMBER	KIT PER BOX	BOX DIMENSION		BOX WEIGHT		STOCK IN AMERICA MSRP PRICING USD	
		mm	inch				
		W x D x H	W x D x H	KG	LB	KIT	BOX
UCFT6584/06	20	220 x 165 x 140	8 5/8" x 6 1/2" x 5 1/2"	1.00	2.20	4.145	82.900

NEW! NEW DESIGN WILL REPLACE CURRENT DESIGN WHEN CURRENT DESIGN INVENTORY IS OVER

OPTION 1
“OPEN/CLOSED"
6583G + 6584G + 6608 + CFT6584/06

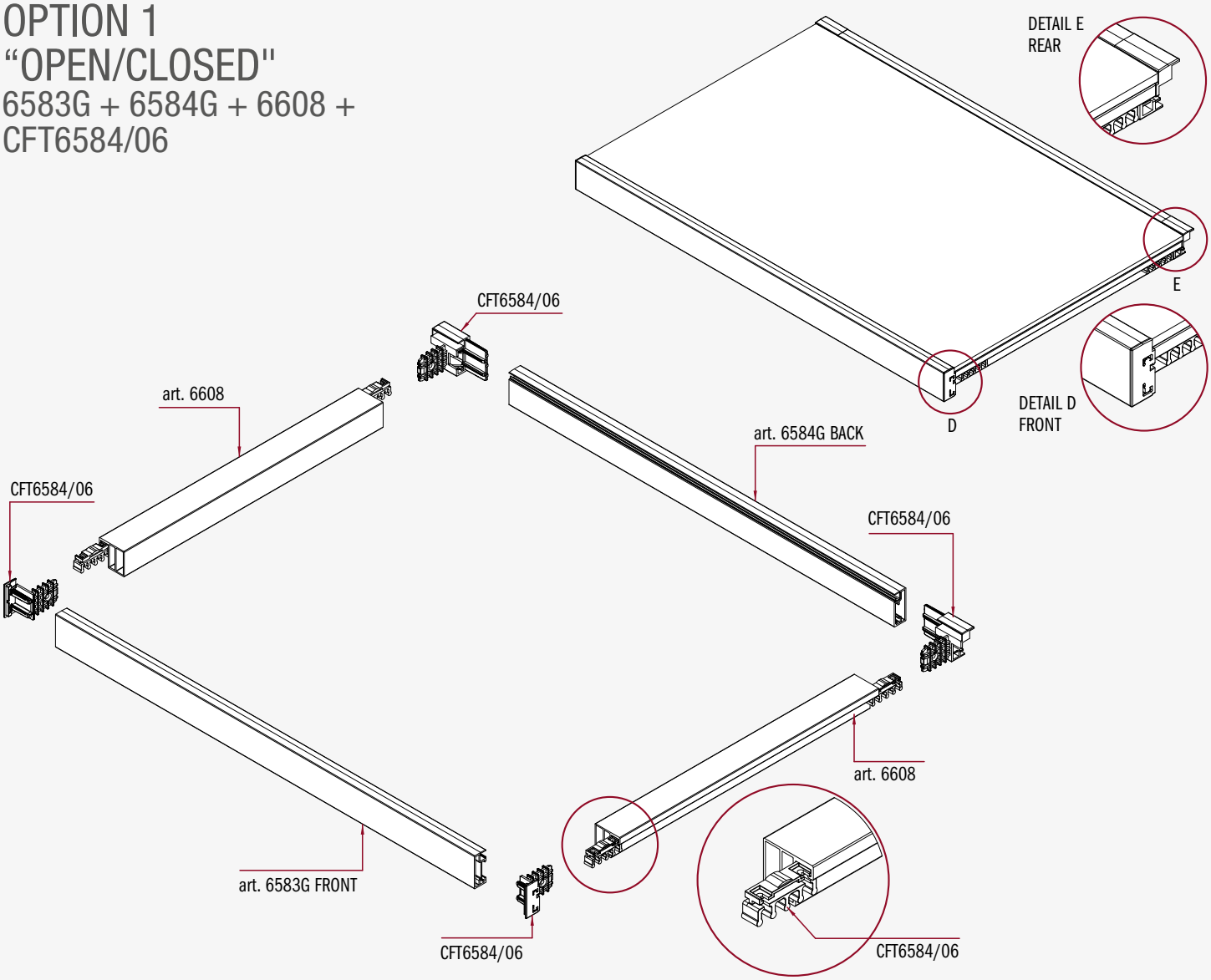

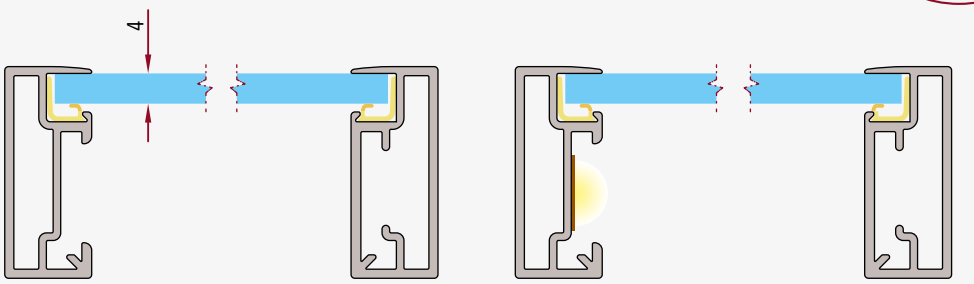

CFT6583 01

JUNCTION AND HOLDER KIT FOR "STRIKE" SHELF OPTION 2 (SEE DESIGN) "OPEN/OPEN" WITH 6581 E 6608

ENSEMBLE DE JONCTION ET SUPPORT POUR ÉTAGÈRE "STRIKE" OPTION 2 (VOIR DESIGN) "OUVERT/OUVERT" AVEC 6581 ET 6608

CONJUNTO DE CONEXIONES Y SOPORTE "STRIKE" OPCIÓN 2 (VER DISEÑO) "ABIERTO / ABIERTO" CON 6581 Y 6608

ITEM NUMBER	KIT PER BOX	BOX DIMENSION mm W x D x H	BOX DIMENSION inch W x D x H	BOX WEIGHT KG	BOX WEIGHT LB	STOCK IN AMERICA MSRP PRICING USD KIT	STOCK IN AMERICA MSRP PRICING USD BOX
UCFT6583/01	20	220 x 165 x 140	8 5/8" x 6 1/2" x 5 1/2"	1.00	2.20	4.145	82.900

OPTION 2
"OPEN/OPEN"
6583G + 6583G + 6608 + CFT6583/01

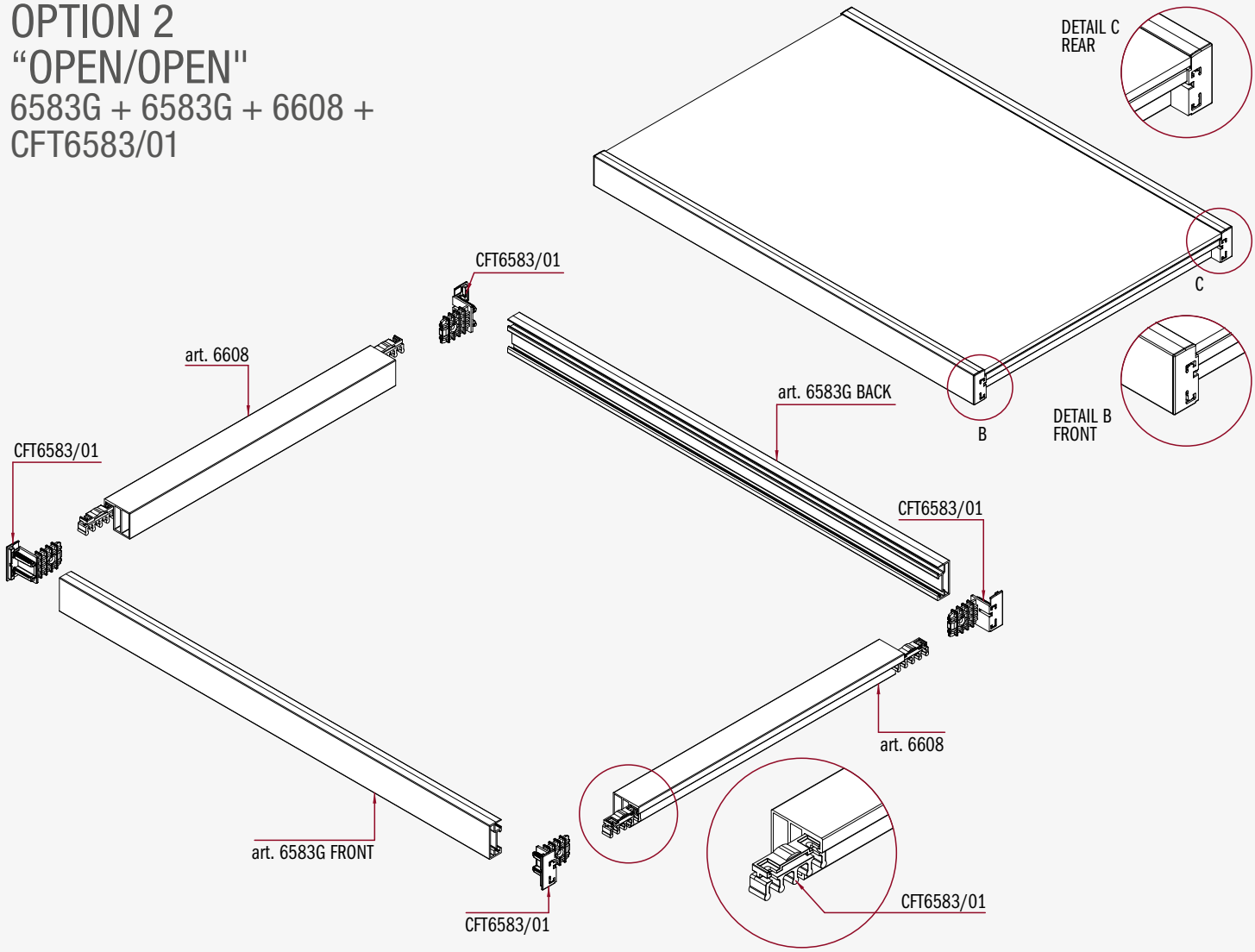

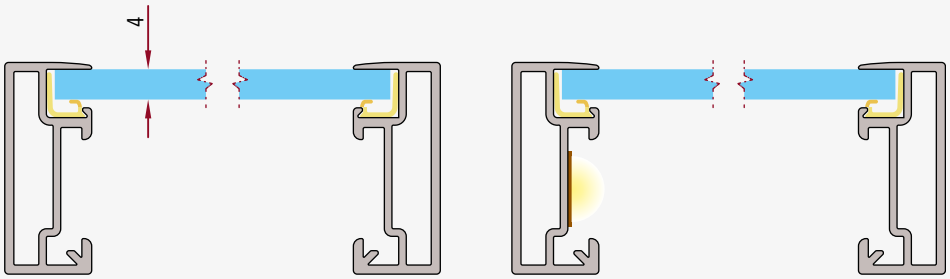

1751

ALUMINUM PROFILE FOR SHELVES
Aluminum profile for shelves. 50S Aluminium clear anodize other colours available from Italy.

PROFIL PROTECTION BORD ETAGÈRE
Profil protection bord étagère en aluminium. 50S Aluminium clair anodisé autrs coleurs disponibles de l'Italie.

PERFIL FRONTAL EN ALUMINIO PARA BALDA
Perfil frontal en aluminio para balda. 50S Aluminio anodizado claro otros colores disponibles de Italia.

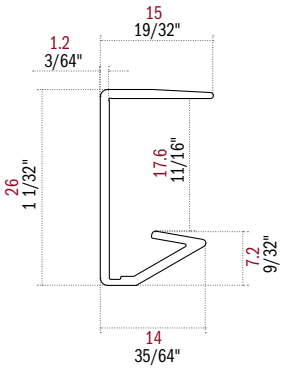

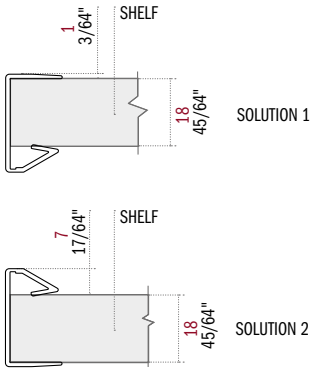

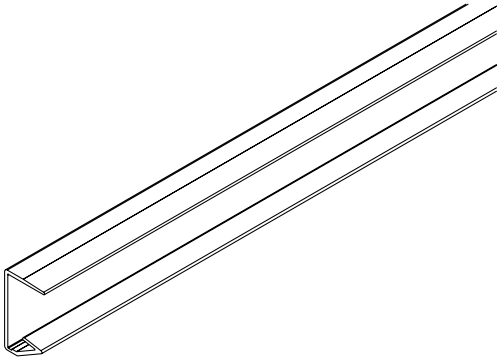

COLORS	ITEM NUMBER	LENGTH		PCS PER BOX	BOX DIMENSION		BOX WEIGHT		STOCK IN AMERICA MSRP PRICING USD			
					mm	inch						
		mm	inch		W x D x H	W x D x H	KG	LB	METER	FOOT	EACH	BOX
50S	U175150SL27	2670	1051 3/16"	10	2740 x 120 x 100	107 7/8" x 4 3/4" x 3 7/8"	5.90	13.01	10.469	3.191	279.522	2795.223
50S	U175150SL41	4100	161 7/16"	10	4250 x 120 x 100	167 3/8" x 4 3/4" x 3 7/8"	8.50	18.74	9.894	3.016	40.565	405.654

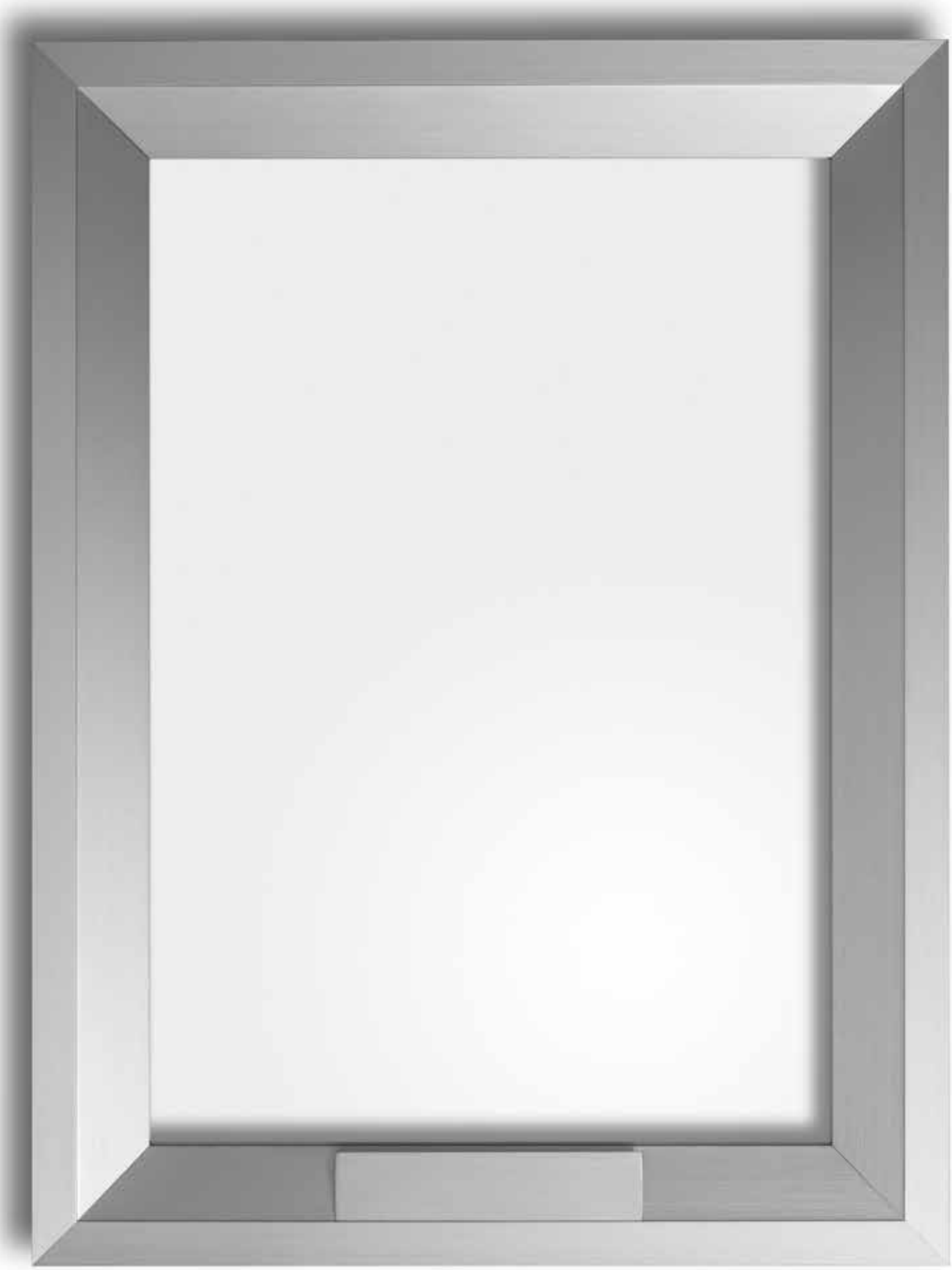

DOOR FRAMES

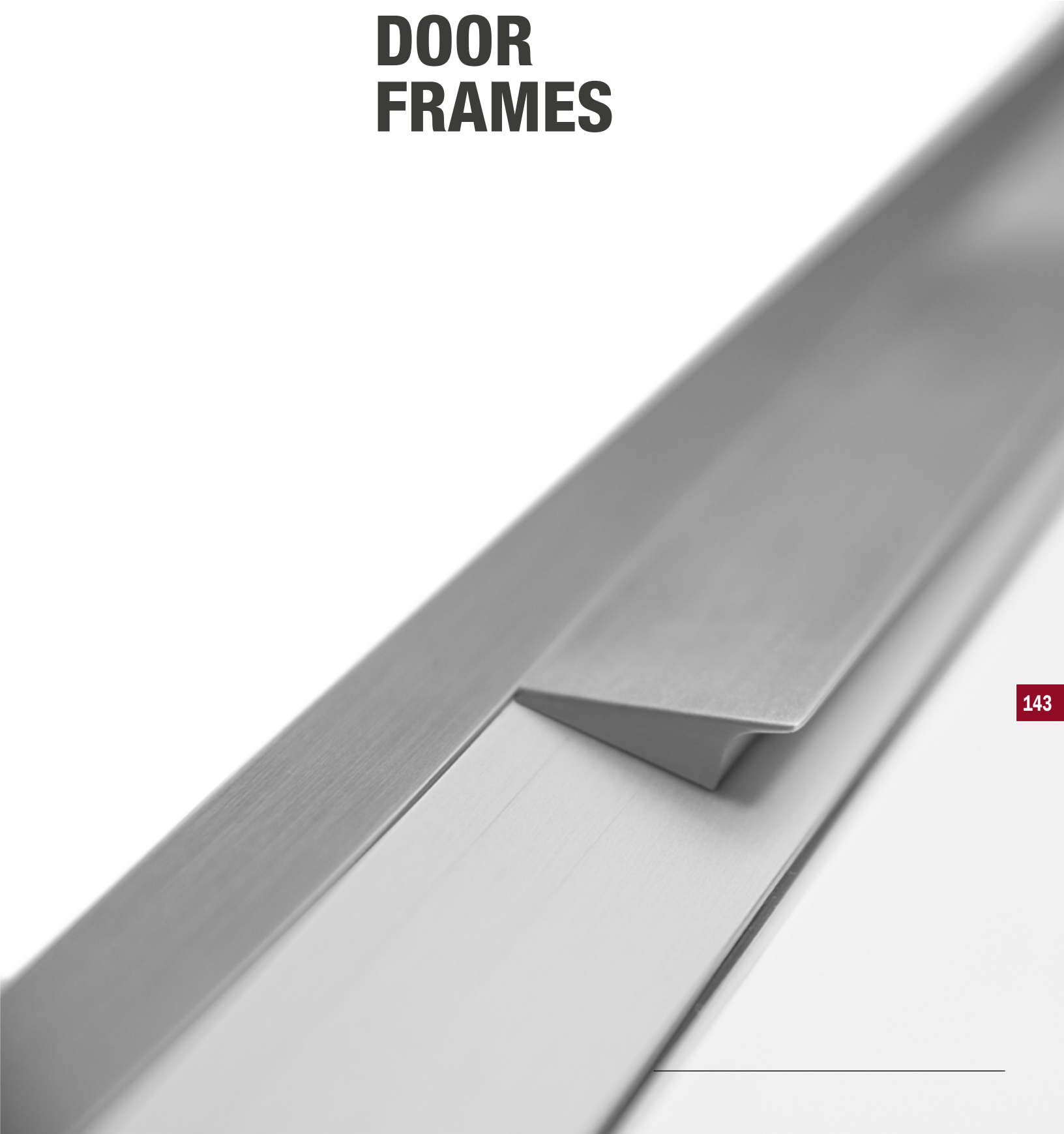

2558 (GASKET AND SCREWS INCLUDED)

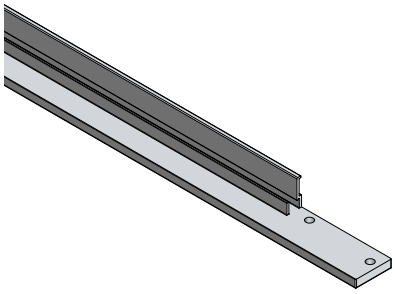

ALUMINUM DOOR PROFILE
10 Pieces and 50 Screws per Box
50S Aluminum Clear Anodize
S2I Aluminum Titanium Anodize
V12 Aluminum Black Matt Powder Coated
Other Colors and Lengths Available FROM ITALY

PROFILÉ EN ALUMINIUM POUR PORTE
10 pièces et 50 vis par boîte
50S Aluminium Clair Anodisé
S2I Aluminium Titanium Anodize
V12 Aluminium Noir Mat Peint à Poudre
Autres Couleurs et Longueurs Disponibles DE L'ITALIE

PERFILES EN ALUMINIO PARA PUERTAS
10 piezas y 50 tornillos por confección
50S Aluminio Anodizado Claro
S2I Aluminio Anodizado Titanio
V12 Aluminio Negro Mate Barnizado
Otros Colores y Dimensiones DE ITALIA

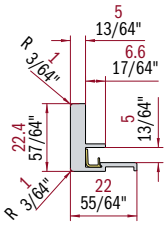

SEAL GASKET FOR 4 MM GLASS	SCREWS
2357AGV	VS39X18x

COLORS	ITEM NUMBER	LENGTH		PCS PER BOX	BOX DIMENSION		BOX WEIGHT		STOCK IN AMERICA MSRP PRICING USD			
					mm	inch						
		mm	inch		W x D x H	W x D x H	KG	LB	METER	FOOT	EACH	BOX
50S	U255850S.0068	377.80	14 7/8"	10	580 x 140 x 90	22 7/8" x 5 1/2" x 3 1/2"	2.00	4.41			63.685	636.850
50S	U255850S.0069	454.00	17 7/8"	10	660 x 140 x 90	26" x 5 1/2" x 3 1/2"	2.40	5.29			68.612	686.120
50S	U255850S.0070	530.20	20 7/8"	10	730 x 140 x 90	28 3/4" x 5 1/2" x 3 1/2"	2.70	5.95			69.469	694.690
50S	U255850S.0071	606.40	23 7/8"	10	800 x 140 x 90	31 1/2" x 5 1/2" x 3 1/2"	3.00	6.61			70.297	702.970
50S	U255850S.0072	758.80	29 7/8"	10	960 x 140 x 90	37 3/4" x 5 1/2" x 3 1/2"	3.60	7.94			80.447	804.470
50S	U255850S.0073	911.20	35 7/8"	10	1110 x 140 x 90	43 3/4" x 5 1/2" x 3 1/2"	4.20	9.26			82.177	821.770
50S	U255850S.0074	1063.60	41 7/8"	10	1260 x 140 x 90	49 5/8" x 5 1/2" x 3 1/2"	4.80	10.58			101.643	1016.430
S2I	U2558S2I.0068	377.80	14 7/8"	10	580 x 140 x 90	22 7/8" x 5 1/2" x 3 1/2"	2.00	4.41			68.834	688.34
S2I	U2558S2I.0069	454.00	17 7/8"	10	660 x 140 x 90	26" x 5 1/2" x 3 1/2"	2.40	5.29			74.169	741.690
S2I	U2558S2I.0070	530.20	20 7/8"	10	730 x 140 x 90	28 3/4" x 5 1/2" x 3 1/2"	2.70	5.95			75.097	750.970
S2I	U2558S2I.0071	606.40	23 7/8"	10	800 x 140 x 90	31 1/2" x 5 1/2" x 3 1/2"	3.00	6.61			75.994	759.940
S2I	U2558S2I.0072	758.80	29 7/8"	10	960 x 140 x 90	37 3/4" x 5 1/2" x 3 1/2"	3.60	7.94			86.984	869.840
S2I	U2558S2I.0073	911.20	35 7/8"	10	1110 x 140 x90	43 3/4" x 5 1/2" x 3 1/2"	4.20	9.26			88.857	888.570
S2I	U2558S2I.0074	1063.60	41 7/8"	10	1260 x 140 x 90	49 5/8" x 5 1/2" x 3 1/2"	4.80	10.58			109.936	1099.360
V12	U2558V12.0068	377.80	14 7/8"	10	580 x 140 x 90	22 7/8" x 5 1/2" x 3 1/2"	2.00	4.41			65.659	656.590
V12	U2558V12.0069	454.00	17 7/8"	10	660 x 140 x 90	26" x 5 1/2" x 3 1/2"	2.40	5.29			70.740	707.400
V12	U2558V12.0070	530.20	20 7/8"	10	730 x 140 x 90	28 3/4" x 5 1/2" x 3 1/2"	2.70	5.95			71.624	716.240
V12	U2558V12.0071	606.40	23 7/8"	10	800 x 140 x 90	31 1/2" x 5 1/2" x 3 1/2"	3.00	6.61			72.478	724.780
V12	U2558V12.0072	758.80	29 7/8"	10	960 x 140 x 90	37 3/4" x 5 1/2" x 3 1/2"	3.60	7.94			82.945	829.450
V12	U2558V12.0073	911.20	35 7/8"	10	1110 x 140 x 90	43 3/4" x 5 1/2" x 3 1/2"	4.20	9.26			84.729	847.290
V12	U2558V12.0074	1063.60	41 7/8"	10	1260 x 140 x90	49 5/8" x 5 1/2" x 3 1/2"	4.80	10.58			104.804	1048.040

2556G (GASKET INCLUDED)

ALUMINUM DOOR PROFILE
50S Aluminum Clear Anodize
S2I Aluminum Titanium Anodize
V12 Aluminum Black Matt Powder Coated
LU5 Aluminum Chrome Anodize
Other Colors and Lengths Available FROM ITALY

PROFILÉ EN ALUMINIUM POUR PORTE
50S Aluminium Clair Anodisé
S2I Aluminium Titanium Anodize
V12 Aluminium Noir Mat Peint à Poudre
LU5 Aluminium Chrome Anodisé
Autres Couleurs et Longueurs Disponibles DE L'ITALIE

PERFILES EN ALUMINIO PARA PUERTAS
50S Aluminio Anodizado Claro
S2I Aluminio Anodizado Titanio
V12 Aluminio Negro Mate Barnizado
LU5 Aluminio Anodizado Chrome
Otros Colores y Dimensiones DE ITALIA

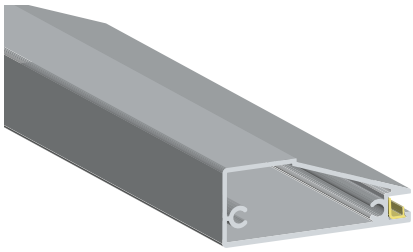

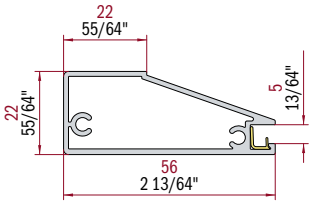

SEAL GASKET FOR 4 MM GLASS	JOINT PLATE	SCREWS
2357AGV	2000SQZ3	VAZB4X08TSP

COLORS	ITEM NUMBER	LENGTH		PCS PER BOX	BOX DIMENSION		BOX WEIGHT		STOCK IN AMERICA MSRP PRICING USD			
					mm	inch						
		mm	inch		W x D x H	W x D x H	KG	LB	METER	FOOT	EACH	BOX
50S	U2556G50SL27	2670	105 1/8"	10	2740 x 125 x 95	107 7/8" x 4 7/8" x 3 3/4"	18.00	39.68	25.109	7.653	67.041	670.410
50S	U2556G50SL41	4100	161 7/16"	10	4250 x 125 x 95	167 3/8" x 4 7/8" x 3 3/4"	27.00	59.52	24.207	7.378	99.249	992.487
S2I	U2556GS2IL27	2670	105 1/8"	10	2740 x 125 x 95	107 7/8" x 4 7/8" x 3 3/4"	18.00	39.68	30.096	9.173	80.356	803.563
S2I	U2556GS2IL41	4100	161 7/16"	10	4250 x 125 x 95	167 3/8" x 4 7/8" x 3 3/4"	27.00	59.52	29.080	8.864	119.228	1192.280
V12	U2556GV12L27	2670	105 1/8"	10	2740 x 125 x 95	107 7/8" x 4 7/8" x 3 3/4"	18.00	39.68	25.880	7.888	69.100	690.996
V12	U2556GV12L41	4100	161 7/16"	10	4250 x 125 x 95	167 3/8" x 4 7/8" x 3 3/4"	27.00	59.52	24.954	7.606	102.311	1023.114
									AVAILABLE FROM ITALY MSRP PRICING USD			
LU5	R2556GLU5L41	4100	161 7/16"		<<<<< MINIMUM ORDER AND PACKAGING TO BE CONFIRMED >>>>>				30.886	9.414	126.633	

2557 (SCREWS INCLUDED)

ALUMINUM DOOR HANDLE
50S Aluminum Clear Anodize
S2I Aluminum Titanium Anodize
V12 Aluminum Black Matt Powder Coated
LU5 Aluminum Chrome Anodize
Other Colors and Lengths Available FROM ITALY

POIGNÉE POUR PORTE EN ALUMINIUM
50S Aluminium Clair Anodisé
S2I Aluminium Titanium Anodize
V12 Aluminium Noir Mat Peint à Poudre
LU5 Aluminium Chrome Anodisé
Autres Couleurs et Longueurs Disponibles DE L'ITALIE

TIRADOR EN ALUMINIO PARA PUERTAS
50S Aluminio Anodizado Claro
S2I Aluminio Anodizado Titanio
V12 Aluminio Negro Mate Barnizado
LU5 Aluminio Anodizado Chrome
Otros Colores y Dimensiones DE ITALIA

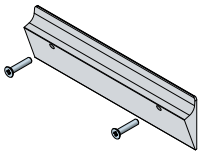

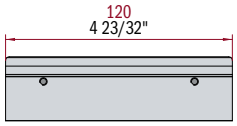

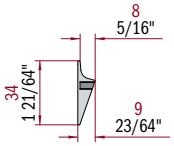

COLORS	ITEM NUMBER	LENGTH		PCS PER BOX	BOX DIMENSION		BOX WEIGHT		STOCK IN AMERICA MSRP PRICING USD	
					mm	inch				
		mm	inch		W x D x H	W x D x H	KG	LB	EACH	BOX
50S	U255750S.002	120	4 3/4"	10	280 x 60 x 58	11" x 2 3/8" x 2 1/4"	0.80	1.76	22.578	225.780
S2I	U2557S2I.002	120	4 3/4"	10	280 x 60 x 58	11" x 2 3/8" x 2 1/4"	0.80	1.76	24.778	247.780
V12	U2557V12.002	120	4 3/4"	10	280 x 60 x 58	11" x 2 3/8" x 2 1/4"	0.80	1.76	23.246	232.460
									AVAILABLE FROM ITALY MSRP PRICING USD	
LU5	2557LU5.0002	120	4 3/4"		<<<<< MINIMUM ORDER AND PACKAGING TO BE CONFIRMED >>>>>				21.926	

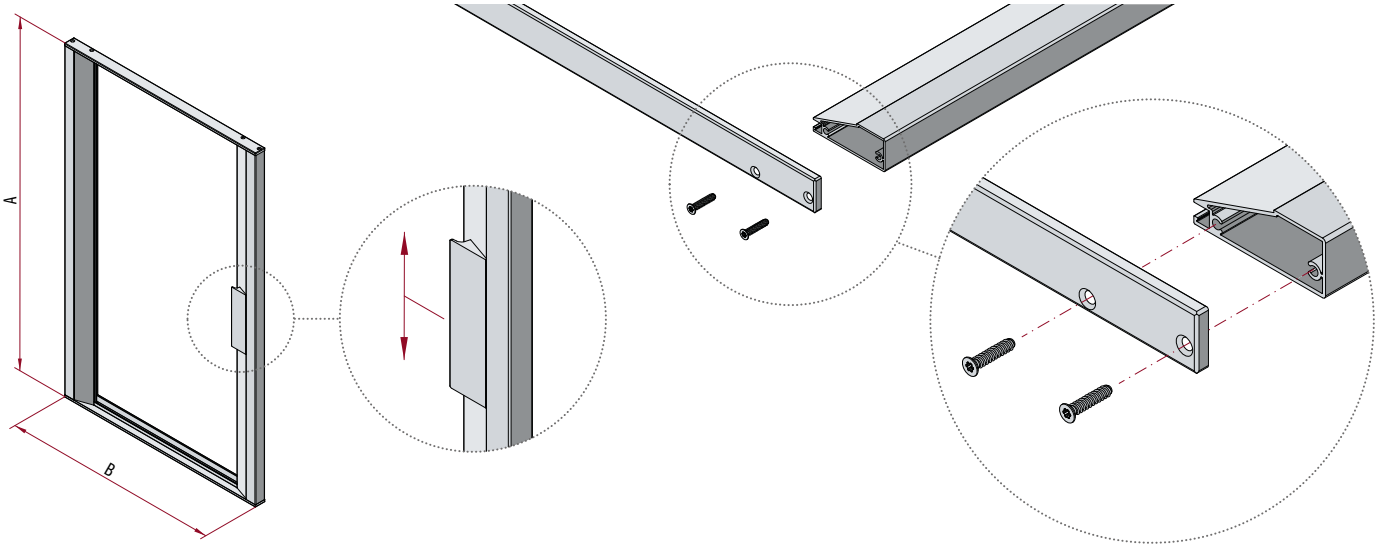

2556G (GASKET INCLUDED)

ALUMINUM DOOR PROFILE
50S Aluminum Clear Anodize
S2I Aluminum Titanium Anodize
V12 Aluminum Black Matt Powder Coated
LU5 Aluminum Chrome Anodize
Other Colors and Lengths Available FROM ITALY

PROFILÉ EN ALUMINIUM POUR PORTE
50S Aluminium Clair Anodisé
S2I Aluminium Titanium Anodize
V12 Aluminium Noir Mat Peint à Poudre
LU5 Aluminium Chrome Anodisé
Autres Couleurs et Longueurs Disponibles DE L'ITALIE

PERFILES EN ALUMINIO PARA PUERTAS
50S Aluminio Anodizado Claro
S2I Aluminio Anodizado Titanio
V12 Aluminio Negro Mate Barnizado
LU5 Aluminio Anodizado Chrome
Otros Colores y Dimensiones DE ITALIA

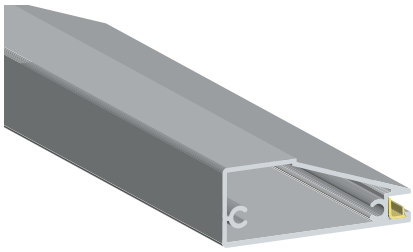

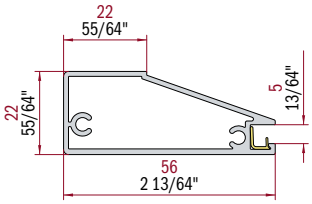

SEAL GASKET FOR 4 MM GLASS	JOINT PLATE	SCREWS
2357AGV	2000SQZ3	VAZB4X08TSP

COLORS	ITEM NUMBER	LENGTH		PCS PER BOX	BOX DIMENSION		BOX WEIGHT		STOCK IN AMERICA MSRP PRICING USD			
					mm	inch						
		mm	inch		W x D x H	W x D x H	KG	LB	METER	FOOT	EACH	BOX
50S	U2556G50SL27	2670	105 1/8"	10	2740 x 125 x 95	107 7/8" x 4 7/8" x 3 3/4"	18.00	39.68	25.109	7.653	67.041	670.410
50S	U2556G50SL41	4100	161 7/16"	10	4250 x 125 x 95	167 3/8" x 4 7/8" x 3 3/4"	27.00	59.52	24.207	7.378	99.249	992.487
S2I	U2556GS2IL27	2670	105 1/8"	10	2740 x 125 x 95	107 7/8" x 4 7/8" x 3 3/4"	18.00	39.68	30.096	9.173	80.356	803.563
S2I	U2556GS2IL41	4100	161 7/16"	10	4250 x 125 x 95	167 3/8" x 4 7/8" x 3 3/4"	27.00	59.52	29.080	8.864	119.228	1192.280
V12	U2556GV12L27	2670	105 1/8"	10	2740 x 125 x 95	107 7/8" x 4 7/8" x 3 3/4"	18.00	39.68	25.880	7.888	69.100	690.996
V12	U2556GV12L41	4100	161 7/16"	10	4250 x 125 x 95	167 3/8" x 4 7/8" x 3 3/4"	27.00	59.52	24.954	7.606	102.311	1023.114
									AVAILABLE FROM ITALY MSRP PRICING USD			
LU5	R2556GLU5L41	4100	161 7/16"		<<<<< MINIMUM ORDER AND PACKAGING TO BE CONFIRMED >>>>>				30.886	9.414	126.633	

2557 (SCREWS INCLUDED)

ALUMINUM DOOR HANDLE
50S Aluminum Clear Anodize
S2I Aluminum Titanium Anodize
V12 Aluminum Black Matt Powder Coated
LU5 Aluminum Chrome Anodize
Other Colors and Lengths Available FROM ITALY

POIGNÉE POUR PORTE EN ALUMINIUM
50S Aluminium Clair Anodisé
S2I Aluminium Titanium Anodize
V12 Aluminium Noir Mat Peint à Poudre
LU5 Aluminium Chrome Anodisé
Autres Couleurs et Longueurs Disponibles DE L'ITALIE

TIRADOR EN ALUMINIO PARA PUERTAS
50S Aluminio Anodizado Claro
S2I Aluminio Anodizado Titanio
V12 Aluminio Negro Mate Barnizado
LU5 Aluminio Anodizado Chrome
Otros Colores y Dimensiones DE ITALIA

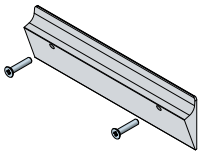

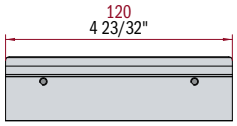

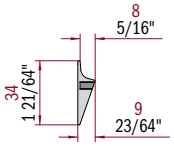

COLORS	ITEM NUMBER	LENGTH		PCS PER BOX	BOX DIMENSION		BOX WEIGHT		STOCK IN AMERICA MSRP PRICING USD	
					mm	inch				
		mm	inch		W x D x H	W x D x H	KG	LB	EACH	BOX
50S	U255750S.002	120	4 3/4"	10	280 x 60 x 58	11" x 2 3/8" x 2 1/4"	0.80	1.76	22.578	225.780
S2I	U2557S2I.002	120	4 3/4"	10	280 x 60 x 58	11" x 2 3/8" x 2 1/4"	0.80	1.76	24.778	247.780
V12	U2557V12.002	120	4 3/4"	10	280 x 60 x 58	11" x 2 3/8" x 2 1/4"	0.80	1.76	23.246	232.460
									AVAILABLE FROM ITALY MSRP PRICING USD	
LU5	2557LU5.0002				<<<<< MINIMUM ORDER AND PACKAGING TO BE CONFIRMED >>>>>				21.926	

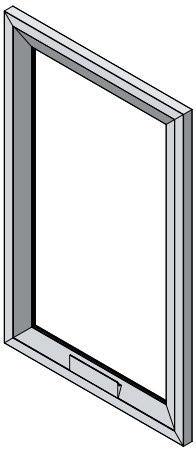

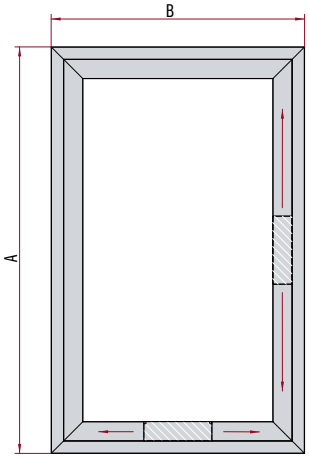

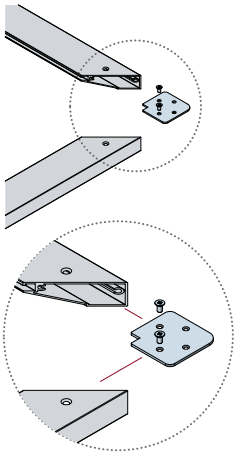

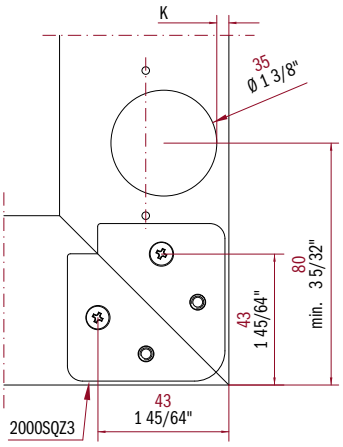

2364AG (GASKET INCLUDED)

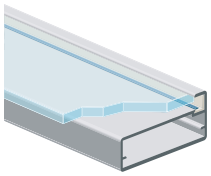

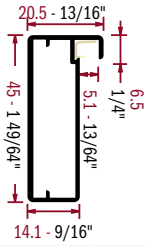

ALUMINUM DOOR PROFILE
50S Aluminum Clear Anodize
S2I Aluminum Titanium Anodize
SB1 Aluminum Stainless Anodize
V12 Aluminum Black Matt Powder Coated
LU5 Aluminum Chrome Anodize
Other Colors and Lengths Available FROM ITALY

PROFILÉ EN ALUMINIUM POUR PORTE
50S Aluminium Clair Anodisé
S2I Aluminium Titanium Anodize
SB1 Aluminium Inox Anodisé
V12 Aluminium Noir Mat Peint à Poudre
LU5 Aluminium Chrome Anodisé
Autres Couleurs et Longueurs Disponibles DE L'ITALIE

PERFILES EN ALUMINIO PARA PUERTAS
50S Aluminio Anodizado Claro
S2I Aluminio Anodizado Titanio
SB1 Aluminio Inox Anodizado
V12 Aluminio Negro Mate Barnizado
LU5 Aluminio Anodizado Chrome
Otros Colores y Dimensiones DE ITALIA

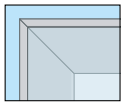

SEAL GASKET FOR 4 MM GLASS	JOINT PLATE	SCREWS
2357AGV	2000SQZ3	VAZB4X08TSP

COLORS	ITEM NUMBER	LENGTH mm	LENGTH inch	PCS PER BOX	BOX DIMENSION mm W x D x H	BOX DIMENSION inch W x D x H	BOX WEIGHT KG	BOX WEIGHT LB	STOCK IN AMERICA MSRP PRICING USD METER	FOOT	EACH	BOX
50S	U2364AG50SL27	2670	105 1/8"	10	2740 x 125 x 95	107 7/8" x 4 7/8" x 3 3/4"	13.00	28.66	18.781	5.724	50.145	501.453
50S	U2364AG50SL41	4100	161 7/16''	10	4250 x 125 x 95	167 3/8" x 4 7/8" x 3 3/4"	20.00	44.09	17.003	5.183	69.712	697.123
S2I	U2364AGS2IL27	2670	105 1/8"	10	2740 x 125 x 95	107 7/8" x 4 7/8" x 3 3/4"	13.00	28.66	24.787	7.555	66.181	661.813
S2I	U2364AGS2IL41	4100	161 7/16''	10	4250 x 125 x 95	167 3/8" x 4 7/8" x 3 3/4"	20.00	44.09	24.363	7.426	99.888	998.883
SB1	U2364AGSB1L27	2670	105 1/8"	10	2740 x 125 x 95	107 7/8" x 4 7/8" x 3 3/4"	13.00	28.66	29.326	8.939	78.300	783.004
SB1	U2364AGSB1L41	4100	161 7/16''	10	4250 x 125 x 95	167 3/8" x 4 7/8" x 3 3/4"	20.00	44.09	27.743	8.456	113.746	1137.463
V12	U2364AGV12L27	2670	105 1/8"	10	2740 x 125 x 95	107 7/8" x 4 7/8" x 3 3/4"	13.00	28.66	19.353	5.899	51.673	516.725
V12	U2364AGV12L41	4100	161 7/16''	10	4250 x 125 x 95	167 3/8" x 4 7/8" x 3 3/4"	20.00	44.09	17.525	5.342	71.853	718.525
									AVAILABLE FROM ITALY MSRP PRICING USD			
LU5	R2364AGLU5L41	4100	161 7/16''		<<<<< MINIMUM ORDER AND PACKAGING TO BE CONFIRMED >>>>>				24.784	7.554	101.614	

2446

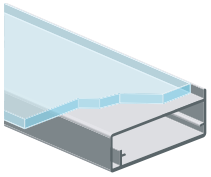

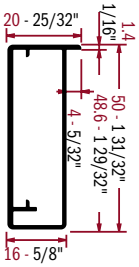

ALUMINUM DOOR PROFILE
50S Aluminum Clear Anodize
S2I Aluminum Titanium Anodize
SB1 Aluminum Stainless Anodize
V12 Aluminum Black Matt Powder Coated
LU5 Aluminum Chrome Anodize
Other Colors and Lengths Available FROM ITALY

PROFILÉ EN ALUMINIUM POUR PORTE
50S Aluminium Clair Anodisé
S2I Aluminium Titanium Anodize
SB1 Aluminium Inox Anodisé
V12 Aluminium Noir Mat Peint à Poudre
LU5 Aluminium Chrome Anodisé
Autres Couleurs et Longueurs Disponibles DE L'ITALIE

PERFILES EN ALUMINIO PARA PUERTAS
50S Aluminio Anodizado Claro
S2I Aluminio Anodizado Titanio
SB1 Aluminio Inox Anodizado
V12 Aluminio Negro Mate Barnizado
LU5 Aluminio Anodizado Chrome
Otros Colores y Dimensiones DE ITALIA

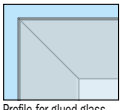

Profile for glued glass
Profil de verre collé
Perfil para vidrio pegado

JOINT PLATE	SCREWS
2000SQZ3	VAZB4X08TSP

COLORS	ITEM NUMBER	LENGTH mm	LENGTH inch	PCS PER BOX	BOX DIMENSION mm W x D x H	BOX DIMENSION inch W x D x H	BOX WEIGHT KG	BOX WEIGHT LB	STOCK IN AMERICA MSRP PRICING USD METER	FOOT	EACH	BOX
50S	U244650SL27	2670	105 1/8"	10	2740 x 125 x 95	107 7/8" x 4 7/8" x 3 3/4"	14.00	30.86	18.191	5.545	48.570	485.700
50S	U244650SL41	4100	161 7/16''	10	4250 x 125 x 95	167 3/8" x 4 7/8" x 3 3/4"	21.50	47.40	17.603	5.365	72.172	721.723
S2I	U2446S2IL27	2670	105 1/8"	10	2740 x 125 x 95	107 7/8" x 4 7/8" x 3 3/4"	14.00	30.86	23.233	7.081	62.032	620.321
S2I	U2446S2IL41	4100	161 7/16''	10	4250 x 125 x 95	167 3/8" x 4 7/8" x 3 3/4"	21.50	47.40	22.290	6.794	91.389	913.890
SB1	U2446SB1L27	2670	105 1/8"	10	2740 x 125 x 95	107 7/8" x 4 7/8" x 3 3/4"	14.00	30.86	31.617	9.637	84.417	844.174
SB1	U2446SB1L41	4100	161 7/16''	10	4250 x 125 x 95	167 3/8" x 4 7/8" x 3 3/4"	21.50	47.40	28.723	8.755	117.764	1177.643
V12	U2446V12L27	2670	105 1/8"	10	2740 x 125 x 95	107 7/8" x 4 7/8" x 3 3/4"	14.00	30.86	18.746	5.714	50.052	500.518
V12	U2446V12L41	4100	161 7/16''	10	4250 x 125 x 95	167 3/8" x 4 7/8" x 3 3/4"	21.50	47.40	18.144	5.530	74.390	743.904
									AVAILABLE FROM ITALY MSRP PRICING USD			
LU5	R2446LU5L41	4100	161 7/16''		<<<<< MINIMUM ORDER AND PACKAGING TO BE CONFIRMED >>>>>				22.313	6.801	91.483	

2591

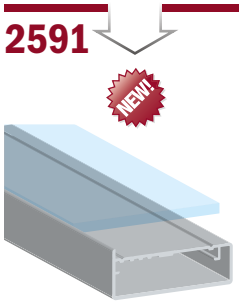

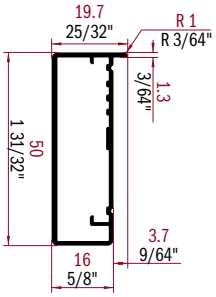

ALUMINUM DOOR PROFILE
50S Aluminum Clear Anodize
S2I Aluminum Titanium Anodize
SB1 Aluminum Stainless Anodize
V12 Aluminum Black Matt Powder Coated
LU5 Aluminum Chrome Anodize
Other Colors and Lengths Available FROM ITALY

PROFILÉ EN ALUMINIUM POUR PORTE
50S Aluminium Clair Anodisé
S2I Aluminium Titanium Anodize
SB1 Aluminium Inox Anodisé
V12 Aluminium Noir Mat Peint à Poudre
LU5 Aluminium Chrome Anodisé
Autres Couleurs et Longueurs Disponibles DE L'ITALIE

PERFILES EN ALUMINIO PARA PUERTAS
50S Aluminio Anodizado Claro
S2I Aluminio Anodizado Titanio
SB1 Aluminio Inox Anodizado
V12 Aluminio Negro Mate Barnizado
LU5 Aluminio Anodizado Chrome
Otros Colores y Dimensiones DE ITALIA

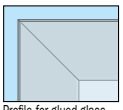

Profile for glued glass
Profil de verre collé
Perfil para vidrio pegado

JOINT PLATE	SCREWS
2000SQZ3	VAxx4x08TSP

COLORS	ITEM NUMBER	LENGTH mm	LENGTH inch	PCS PER BOX	BOX DIMENSION mm W x D x H	BOX DIMENSION inch W x D x H	BOX WEIGHT KG	BOX WEIGHT LB	STOCK IN AMERICA MSRP PRICING USD METER	FOOT	EACH	BOX
50S	U259150SL27	2670	105 1/8"	10	2740 x 125 x 95	107 7/8" x 4 7/8" x 3 3/4"	14.00	30.86	19.336	5.894	51.627	516.271
50S	U259150SL41	4100	161 7/16''	10	4250 x 125 x 95	167 3/8" x 4 7/8" x 3 3/4"	21.50	47.40	18.764	5.719	76.932	769.324
S2I	U2591S2IL27	2670	105 1/8"	10	2740 x 125 x 95	107 7/8" x 4 7/8" x 3 3/4"	14.00	30.86	23.942	7.298	63.925	639.251
S2I	U2591S2IL41	4100	161 7/16''	10	4250 x 125 x 95	167 3/8" x 4 7/8" x 3 3/4"	21.50	47.40	23.336	7.113	95.678	956.776
SB1	U2591SB1L27	2670	105 1/8"	10	2740 x 125 x 95	107 7/8" x 4 7/8" x 3 3/4"	14.00	30.86	30.786	9.384	82.199	821.986
SB1	U2591SB1L41	4100	161 7/16''	10	4250 x 125 x 95	167 3/8" x 4 7/8" x 3 3/4"	21.50	47.40	29.799	9.083	122.176	1221.759
V12	U2591V12L27	2670	105 1/8"	10	2740 x 125 x 95	107 7/8" x 4 7/8" x 3 3/4"	14.00	30.86	19.341	5.895	51.640	516.405
V12	U2591V12L41	4100	161 7/16''	10	4250 x 125 x 95	167 3/8" x 4 7/8" x 3 3/4"	21.50	47.40	18.715	5.704	76.732	767.315
									AVAILABLE FROM ITALY MSRP PRICING USD			
LU5	R2591LU5L41	4100	161 7/16''		<<<<< MINIMUM ORDER AND PACKAGING TO BE CONFIRMED >>>>>				22.313	6.801	91.483	

NEW! NEW DESIGN WILL REPLACE CURRENT DESIGN WHEN CURRENT DESIGN INVENTORY IS OVER

2505G (GASKET INCLUDED)

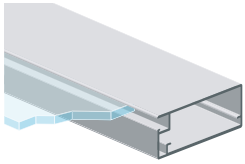

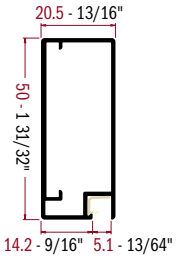

ALUMINUM DOOR PROFILE
50S Aluminum Clear Anodize
S2I Aluminum Titanium Anodize
SB1 Aluminum Stainless Anodize
V12 Aluminum Black Matt Powder Coated
LU5 Aluminum Chrome Anodize
Other Colors and Lengths Available FROM ITALY

PROFILÉ EN ALUMINIUM POUR PORTE
50S Aluminium Clair Anodisé
S2I Aluminium Titanium Anodize
SB1 Aluminium Inox Anodisé
V12 Aluminium Noir Mat Peint à Poudre
LU5 Aluminium Chrome Anodisé
Autres Couleurs et Longueurs Disponibles DE L'ITALIE

PERFILES EN ALUMINIO PARA PUERTAS
50S Aluminio Anodizado Claro
S2I Aluminio Anodizado Titanio
SB1 Aluminio Inox Anodizado
V12 Aluminio Negro Mate Barnizado
LU5 Aluminio Anodizado Chrome
Otros Colores y Dimensiones DE ITALIA

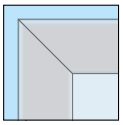

SEAL GASKET FOR 4 MM GLASS	JOINT PLATE	SCREWS
2357AGV	2000SQZ3	VAZB4X08TSP

COLORS	ITEM NUMBER	LENGTH mm	LENGTH inch	PCS PER BOX	BOX DIMENSION mm W x D x H	BOX DIMENSION inch W x D x H	BOX WEIGHT KG	BOX WEIGHT LB	STOCK IN AMERICA MSRP PRICING USD METER	FOOT	EACH	BOX
50S	U2505G50SL27	2670	105 1/8"	10	2740 x 170 x 90	107 7/8" x 6 3/4" x 3 1/2"	14.50	31.97	19.960	6.084	53.293	532.932
50S	U2505G50SL41	4100	161 7/16"	10	4250 x 170 x 90	167 3/8" x 6 3/4" x 3 1/2"	22.00	48.50	19.517	5.949	80.020	800.197
S2I	U2505GS2IL27	2670	105 1/8"	10	2740 x 170 x 90	107 7/8" x 6 3/4" x 3 1/2"	14.50	31.97	25.040	7.632	66.857	668.568
S2I	U2505GS2IL41	4100	161 7/16"	10	4250 x 170 x 90	167 3/8" x 6 3/4" x 3 1/2"	22.00	48.50	24.363	7.426	99.888	998.883
SB1	U2505GSB1L27	2670	105 1/8"	10	2740 x 170 x 90	107 7/8" x 6 3/4" x 3 1/2"	14.50	31.97	32.219	9.820	86.025	860.247
SB1	U2505GSB1L41	4100	161 7/16"	10	4250 x 170 x 90	167 3/8" x 6 3/4" x 3 1/2"	22.00	48.50	31.425	9.578	128.843	1288.425
V12	U2505GV12L27	2670	105 1/8"	10	2740 x 170 x 90	107 7/8" x 6 3/4" x 3 1/2"	14.50	31.97	20.569	6.269	54.919	549.192
V12	U2505GV12L41	4100	161 7/16"	10	4250 x 170 x 90	167 3/8" x 6 3/4" x 3 1/2"	22.00	48.50	20.118	6.132	82.484	824.838
									AVAILABLE FROM ITALY MSRP PRICING USD			
LU5	R2505GLU5L41	4100	161 7/16"		<<<<< MINIMUM ORDER AND PACKAGING TO BE CONFIRMED >>>>>				26.408	8.049	108.273	

2357AG (GASKET INCLUDED)

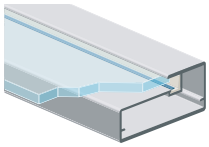

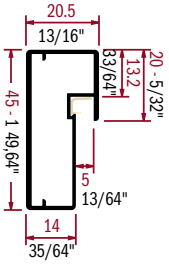

ALUMINUM DOOR PROFILE
50S Aluminum Clear Anodize
SB1 Aluminum Stainless Anodize
LU5 Aluminum Chrome Anodize
Colors and Lengths Available FROM ITALY

PROFILÉ EN ALUMINIUM POUR PORTE
50S Aluminium Clair Anodisé
SB1 Aluminium Inox Anodisé
LU5 Aluminium Chrome Anodisé
Couleurs et Longueurs Disponibles DE L'ITALIE

PERFILES EN ALUMINIO PARA PUERTAS
50S Aluminio Anodizado Claro
SB1 Aluminio Inox Anodizado
LU5 Aluminio Anodizado Chrome
Colores y Dimensiones DE ITALIA

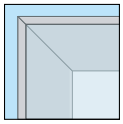

SEAL GASKET FOR 4 MM GLASS	JOINT PLATE	SCREWS
2357AGV	2000SQZ3	VAZB4X08TSP

COLORS	ITEM NUMBER	LENGTH mm	LENGTH inch	PCS PER BOX	BOX DIMENSION mm W x D x H	BOX DIMENSION inch W x D x H	BOX WEIGHT KG	BOX WEIGHT LB	STOCK IN AMERICA MSRP PRICING USD METER	FOOT	EACH	BOX
50S	U2357AG50SL39	3900	153 9/16"	10	4250 x 125 x 95	167 3/8" x 4 7/8" x 3 3/4"	22.00	48.50	17.466	5.324	68.117	681.174
									AVAILABLE FROM ITALY MSRP PRICING USD			
SB1	R2357AGSB1L39	3900	153 9/16"		<<<<< MINIMUM ORDER AND PACKAGING TO BE CONFIRMED >>>>>				27.452	8.367	107.063	
LU5	R2357AGLU5L39	3900	153 9/16"		<<<<< MINIMUM ORDER AND PACKAGING TO BE CONFIRMED >>>>>				25.151	7.666	98.089	

2441G (GASKET INCLUDED)

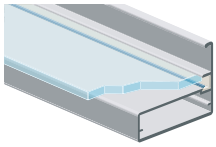

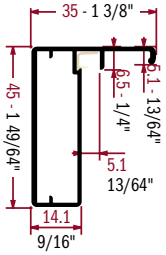

ALUMINUM DOOR PROFILE
Aluminum door profile with built-in handle to be matched with profile 2364AG
50S Aluminum Clear Anodize
SB1 Aluminum Stainless Anodize
LU5 Aluminum Chrome Anodize
Colors and Lengths Available FROM ITALY

PROFILÉ EN ALUMINIUM POUR PORTE
Profilé en aluminium pour porte avec poignée intégré à être appariés avec profile 2364AG
50S Aluminium Clair Anodisé
SB1 Aluminium Inox Anodisé
LU5 Aluminium Chrome Anodisé
Couleurs et Longueurs Disponibles DE L'ITALIE

PERFILES EN ALUMINIO PARA PUERTAS
Perfil en aluminio para puerta con tirador integrado para ser emparejado con el perfil 2364AG
50S Aluminio Anodizado Claro
SB1 Aluminio Inox Anodizado
LU5 Aluminio Anodizado Chrome
Colores y Dimensiones DE ITALIA

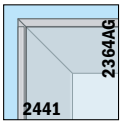

SEAL GASKET FOR 4 MM GLASS	JOINT PLATE	SCREWS
2357AGV	2000SQZ3	VAZB4X08TSP

COLORS	ITEM NUMBER	LENGTH mm	LENGTH inch	PCS PER BOX	BOX DIMENSION mm W x D x H	BOX DIMENSION inch W x D x H	BOX WEIGHT KG	BOX WEIGHT LB	STOCK IN AMERICA MSRP PRICING USD METER	FOOT	EACH	BOX
50S	U2441G50SL42	4200	165 3/8"	10	4250 x 255 x 85	167 3/8" x 10" x 3 3/8"	24.00	52.91	19.249	5.867	80.846	808.458
									AVAILABLE FROM ITALY MSRP PRICING USD			
SB1	IT2441GSB1L42	4200	165 3/8"		<<<<< MINIMUM ORDER AND PACKAGING TO BE CONFIRMED >>>>>				30.349	9.250	127.466	
LU5	IT2441GLU5L42	4200	165 3/8"		<<<<< MINIMUM ORDER AND PACKAGING TO BE CONFIRMED >>>>>				25.229	7.690	105.962	

2465G

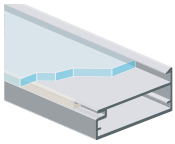

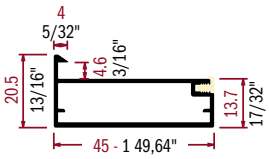

ALUMINUM DOOR PROFILE
45° joint with joint plate.
Aluminum door profile with frontal gasket and short angled insert lip: easier to assemble and a more elegant appearance than other doors with gasket.
50S Aluminum Clear Anodize
SB1 Aluminum Stainless Anodize
LU5 Aluminum Chrome Anodize
Other Colors and Lengths Available FROM ITALY

PROFILÉ EN ALUMINIUM POUR PORTE
45 ° conjointes avec plaque commune.
Profilé en aluminium pour porte avec joint d'étanchéité frontal et lèvre d'insertion courte à angle: plus facile à assembler avec un aspect plus élégant que les autres portes avec joint d'étanchéité.
50S Aluminium Clair Anodisé
SB1 Aluminium Inox Anodisé
LU5 Aluminium Chrome Anodisé
Autres Couleurs et Longueurs Disponibles DE L'ITALIE

PERFILES EN ALUMINIO PARA PUERTAS
45 ° conjuntas con placa de articulación.
Perfil en aluminio para puerta con guarnicion frontal y labio de inserción corto: más fácil de montar y con una apariencia más elegante que otras puertas con guarnicion.
50S Aluminio Anodizado Claro
SB1 Aluminio Inox Anodizado
LU5 Aluminio Anodizado Chrome
Otros Colores y Dimensiones DE ITALIA

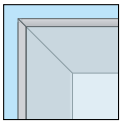
Standard

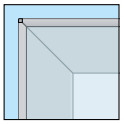
With Corner Bumper

SEAL GASKET FOR 4 MM GLASS	JOINT PLATE	SCREWS
2402AGV	2000SQZ3	VAZB4X08TSP

COLORS	ITEM NUMBER	LENGTH		PCS PER BOX	BOX DIMENSION		BOX WEIGHT		STOCK IN AMERICA MSRP PRICING USD			
					mm	inch						
		mm	inch		W x D x H	W x D x H	KG	LB	METER	FOOT	EACH	BOX
50S	U2465G50SL41	4150	163 3/8"	10	4250 x 125 x 95	167 3/8" x 4 7/8" x 3 3/4"	25.00	55.12	21.550	6.568	89.433	894.325
									AVAILABLE FROM ITALY MSRP PRICING USD			
SB1	R2465GSB1L41	4150	163 3/8"		<<<<< MINIMUM ORDER AND PACKAGING TO BE CONFIRMED >>>>>				28.609	8.720	118.727	
LU5	R2465GLU5L41	4150	163 3/8"		<<<<< MINIMUM ORDER AND PACKAGING TO BE CONFIRMED >>>>>				27.690	8.440	114.914	

CSP0081

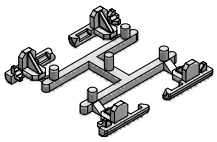

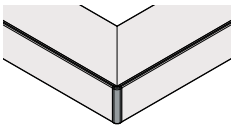

PLASTIC CORNER BUMPER FOR PROFILE 2465.
Can be used in addition to the standard squares and screws to round the corners of the doors avoiding sharp edges. Requires an extra 3 mm 90° cut on the sections (see design).
13 Color Match 50S Clear Anodize
32 Color Match SB1 Stainless Anodize
31 Color Match LU5 Chrome Anodize

PARE-CHOCS DE COIN EN PLASTIQUE POUR PROFILÉ 2465.
Il peut être utilisé en plus des équerres et vis standard pour arrondir les coins des portes en évitant les angles aigus. Nécessite une coupe supplémentaire de 3mm à 90° sur les sections (voir design).
13 Color Match 50S Clair Anodisé
32 Color Match SB1 Inox Anodisé
31 Color Match LU5 Chrome Anodisé

ESQUINA DE PLÁSTICO PARAGOLPES PARA PERFIL 2465.
Se puede utilizar, además de las esquadras y tornillos estándar para redondear las esquinas de las puertas y evitar las esquinas agudas. Requiere un recorte adicional de 3 mm a 90 ° en la seccion (ver diseño).
13 Ajuste de Color 50S Claro Anodizado
32 Ajuste de Color SB1 Inox Anodizado
31 Ajuste de Color LU5 Chrome Anodizado

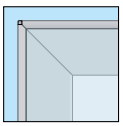

COLORS	ITEM NUMBER	KIT PER BOX	BOX DIMENSION		BOX WEIGHT		STOCK IN AMERICA MSRP PRICING USD			
			mm	inch						
			W x D x H	W x D x H	KG	LB	METER	FOOT	KIT	BOX
13	UCSP0081-13	25	150 x 200 x 100	5 7/8" x 7 7/8" x 3 7/8"	1.50	3.31			1.967	49.175
							AVAILABLE FROM ITALY MSRP PRICING USD			
32	ITCSP0081-32		<<<<< MINIMUM ORDER AND PACKAGING TO BE CONFIRMED >>>>>						3.125	
31	ITCSP0081-31		<<<<< MINIMUM ORDER AND PACKAGING TO BE CONFIRMED >>>>>						2.332	

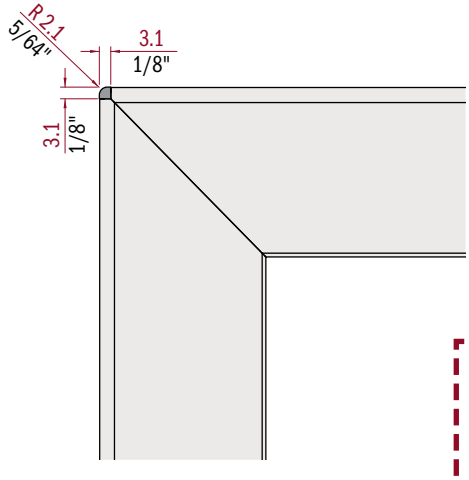

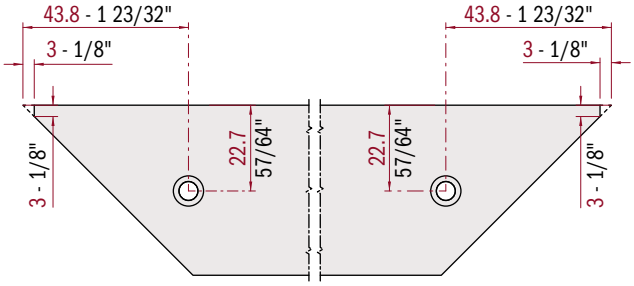

WARNING: It is possible to assemble the 2465 sections with the standard 45° cut using squares and screws; when adding the Plastic Corner Bumper CSP0081 an additional 3mm 90° cut is required on the edge of the sections.

WARNING: *Il est possible d'assembler les sections 2465 avec les coupes standards à 45° en utilisant les équerres et vis; lorsque vous ajoutez les pare-chocs de coin en plastique CSP0081, une coupe supplémentaire de 3 mm à 90° est nécessaire sur le bout des sections.*

WARNING: Es posible montar las secciones 2465 con el cortes estándar a 45° utilizando las esquadras y tornillos; cuando se agrega las esquina de plastico paragolpes CSP0081, un recorte adicional de 3 mm a 90 ° se requiere en las seccion.

2363A

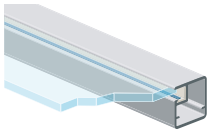

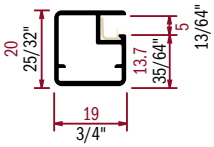

ALUMINUM DOOR PROFILE
50S Aluminum Clear Anodize
SB1 Aluminum Stainless Anodize
LU5 Aluminum Chrome Anodize
Colors and Lengths Available FROM ITALY

PROFILÉ EN ALUMINIUM POUR PORTE
50S Aluminium Clair Anodisé
SB1 Aluminium Inox Anodisé
LU5 Aluminium Chrome Anodisé
Couleurs et Longueurs Disponibles DE L'ITALIE

PERFILES EN ALUMINIO PARA PUERTAS
50S Aluminio Anodizado Claro
SB1 Aluminio Inox Anodizado
LU5 Aluminio Anodizado Chrome
Colores y Dimensiones DE ITALIA

*** UPON REQUEST *** FROM ITALY ***

SEAL GASKET FOR 4 MM GLASS	JOINT PLATE	SCREWS
2357AGV	2001SQZ	VAZB4X08TSP

COLORS	ITEM NUMBER	LENGTH		PCS PER BOX	BOX DIMENSION		BOX WEIGHT		AVAILABLE FROM ITALY MSRP PRICING USD		
					mm	inch					
		mm	inch		W x D x H	W x D x H	KG	LB	METER	FOOT	EACH
50S	R2363AG50SL39	3900	153 9/16"	<<<<< MINIMUM ORDER AND PACKAGING TO BE CONFIRMED >>>>>					15.665	4.775	61.094
SB1	R2363AGSB1L39	3900	153 9/16"	<<<<< MINIMUM ORDER AND PACKAGING TO BE CONFIRMED >>>>>					17.921	5.462	69.892
LU5	R2363AGLU5L39	3900	153 9/16"	<<<<< MINIMUM ORDER AND PACKAGING TO BE CONFIRMED >>>>>					17.948	5.471	69.997

How... Manufacturing Specifications
Comment... *Spécifications de Fabrication*
Cómo... Especificaciones de Fabricación

Doors with 45-degree junction - *Portes avec jonction à 45 degrés*
Puertas con uniones de 45 grados

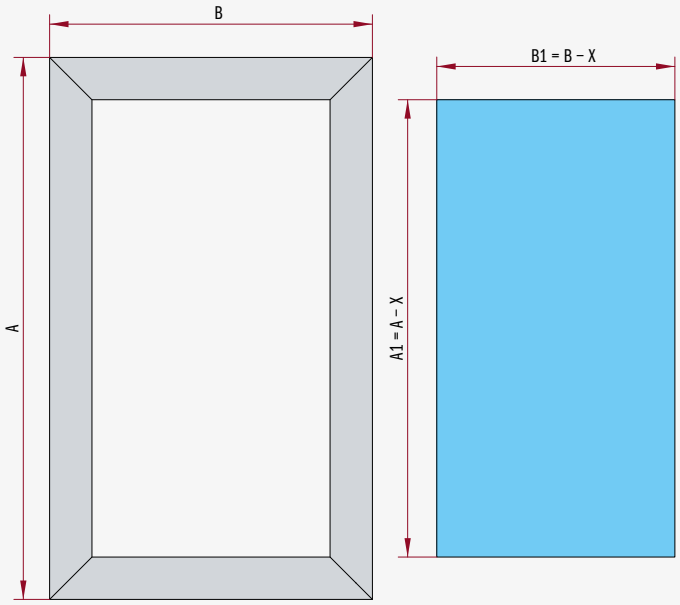

Doors with 90-degree junction - *Portes avec jonction à 90 degrés*
Puertas con uniones de 90 grados

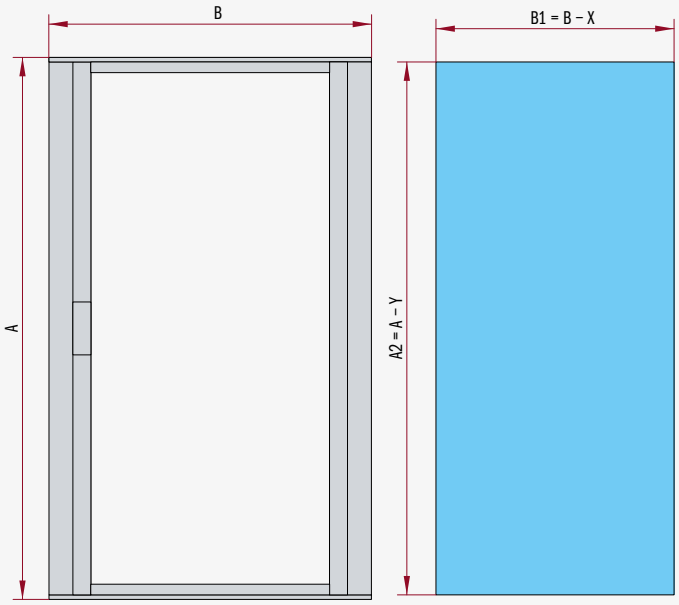

Doors with 45-degree junction - *Portes avec jonction à 45 degrés* - Puertas con uniones de 45 grados				
ITEM NUMBER	X		Interspace	
	mm	inch	mm	inch
2363	27.00	1.063	1.00	0.039
2357	29.00	1.142	1.00	0.039
2465	4.00	0.157	1.00	0.039
2364	5.00	0.197	1.00	0.039
2441	5.00	0.197	1.00	0.039
2446 / 2591	4.00	0.157	1.00	0.039
2505	90.00	3.543	1.00	0.039
2556	102.00	4.016	1.00	0.039

Doors with 90-degree junction - *Portes avec jonction à 90 degrés* - Puertas con uniones de 90 grados						
ITEM NUMBER	X		Y		Interspace	
	mm	inch	mm	inch	mm	inch
2556 - 2558	102.00	4.016	13.00	0.51	1.00	0.039

CF 0095

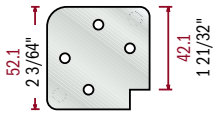

SQUARE AND SCREW KIT FOR ALUMINUM DOOR PROFILE
Square 2000SQZ3 (100pcs) + Screw VAZB4X08TSP (250pcs)

ENSEMBLE D'ÉQUERRE ET VIS POUR PROFILÉ EN ALUMINIUM DE PORTE
Équerre 2000SQZ3 (100pcs) + Vis VAZB4X08TSP (250pcs)

KIT DE ESCUADRAS Y TORNILLOS PARA PERFILES DE ALUMINIOS PARA PUERTAS
Escuadra 2000SQZ3 (100 piezas) + Tornillos VAZB4X08TSP (250)

ITEM NUMBER		KIT PER BOX	BOX DIMENSION mm W x D x H	BOX DIMENSION inch W x D x H	BOX WEIGHT KG	BOX WEIGHT LB	STOCK IN AMERICA MSRP PRICING USD KIT	STOCK IN AMERICA MSRP PRICING USD BOX
UCF.0095	ZINC	1	220 x 165 x 140	8 5/8" x 6 1/2" x 5 1/2"	4.50	9.92	134.053	134.053
UCF.0095BLK	DARKENED	1	220 x 165 x 140	8 5/8" x 6 1/2" x 5 1/2"	4.50	9.92	134.053	134.053

2357AGV

REPLACEMENT GASKET FOR ALUMINUM DOOR PROFILE

JOINT D'ÉTANCHÉITÉ DE REMPLACEMENT POUR PROFILÉ EN ALUMINIUM DE PORTE

GUARNICION PARA PERFILES DE ALUMINIO PARA PUERTAS

ITEM NUMBER		LENGTH mm	LENGTH inch	PCS PER BOX	BOX DIMENSION mm W x D x H	BOX DIMENSION inch W x D x H	BOX WEIGHT KG	BOX WEIGHT LB	STOCK IN AMERICA MSRP PRICING USD a METER	FOOT	EACH	BOX
UR2357AGV.01	for 4 mm glass	1283	50 1/2"	50	1330 x 95 x 65	52 3/8" x 3 3/4" x 2 1/2"	11.00	24.25	3.896	1.188	4.999	249.928

2364AGV

REPLACEMENT GASKET FOR ALUMINUM DOOR PROFILE

JOINT D'ÉTANCHÉITÉ DE REMPLACEMENT POUR PROFILÉ EN ALUMINIUM DE PORTE

GUARNICION PARA PERFILES DE ALUMINIO PARA PUERTAS

ITEM NUMBER		LENGTH mm	LENGTH inch	PCS PER BOX	BOX DIMENSION mm W x D x H	BOX DIMENSION inch W x D x H	BOX WEIGHT KG	BOX WEIGHT LB	STOCK IN AMERICA MSRP PRICING USD a METER	FOOT	EACH	BOX
UR2364AGV.01	for 3 mm glass	1283	50 1/2"	50	1330 x 95 x 65	52 3/8" x 3 3/4" x 2 1/2"	11.00	24.25	3.896	1.188	4.999	249.928

2000SQZ3

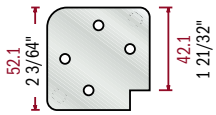

SQUARE FOR ALUMINUM DOOR PROFILE
Available FROM ITALY

ÉQUERRE POUR PROFILÉ EN ALUMINIUM DE PORTE
Disponibles DE L'ITALIE

*** UPON REQUEST *** FROM ITALY ***

ESCUADRAS PARA PERFIL DE ALUMINIO PARA PUERTAS
Disponible DE ITALIA

ITEM NUMBER	PCS PER BOX	BOX DIMENSION mm W x D x H	BOX DIMENSION inch W x D x H	BOX WEIGHT KG	BOX WEIGHT LB	AVAILABLE FROM ITALY MSRP PRICING USD EACH
2000SQZ3		<<<<< MINIMUM ORDER AND PACKAGING TO BE CONFIRMED >>>>>				1.481

2000SQZ4

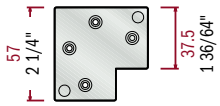

SQUARE FOR ALUMINUM DOOR PROFILE
Available FROM ITALY

ÉQUERRE POUR PROFILÉ EN ALUMINIUM DE PORTE
Disponibles DE L'ITALIE

*** UPON REQUEST *** FROM ITALY ***

ESCUADRAS PARA PERFIL DE ALUMINIO PARA PUERTAS
Disponible DE ITALIA

ITEM NUMBER	PCS PER BOX	BOX DIMENSION mm W x D x H	BOX DIMENSION inch W x D x H	BOX WEIGHT KG	BOX WEIGHT LB	AVAILABLE FROM ITALY MSRP PRICING USD EACH
2000SQZ4		<<<<< MINIMUM ORDER AND PACKAGING TO BE CONFIRMED >>>>>				2.012

2001SQZ

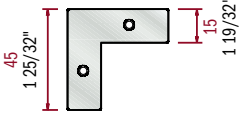

SQUARE FOR ALUMINUM DOOR PROFILE
Available FROM ITALY

ÉQUERRE POUR PROFILÉ EN ALUMINIUM DE PORTE
Disponibles DE L'ITALIE

*** UPON REQUEST *** FROM ITALY ***

ESCUADRAS PARA PERFIL DE ALUMINIO PARA PUERTAS
Disponible DE ITALIA

ITEM NUMBER	PCS PER BOX	BOX DIMENSION mm W x D x H	BOX DIMENSION inch W x D x H	BOX WEIGHT KG	BOX WEIGHT LB	AVAILABLE FROM ITALY MSRP PRICING USD EACH
2001SQZ		<<<<< MINIMUM ORDER AND PACKAGING TO BE CONFIRMED >>>>>				1.396

VAZB4X08TSP

SCREW FOR SQUARE
Available FROM ITALY

VIS POUR ÉQUERRE
Disponibles DE L'ITALIE

*** UPON REQUEST *** FROM ITALY ***

TORNILLOS Y ESCUADRAS
Disponibles DE ITALIA

ITEM NUMBER		PCS PER BOX	BOX DIMENSION mm W x D x H	BOX DIMENSION inch W x D x H	BOX WEIGHT KG	BOX WEIGHT LB	STOCK IN AMERICA MSRP PRICING USD EACH
VAZB4X08TSP	ZINC		<<<<< MINIMUM ORDER AND PACKAGING TO BE CONFIRMED >>>>>				0.028
VAB4X08TSP	DARKENED		<<<<< MINIMUM ORDER AND PACKAGING TO BE CONFIRMED >>>>>				0.079

959

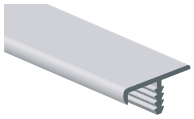

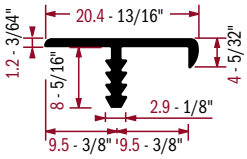

ALUMINUM EDGE PROFILE FOR DOOR
50S Aluminum Clear Anodize

PROFILÉ EN ALUMINIUM POUR BORDURE DE PORTE
50S Aluminium Clair Anodisé

PERFILES DE CANTOS DE ALUMINIO PARA PUERTAS
50S Aluminio Anodizado Claro

COLORS	ITEM NUMBER	LENGTH		PCS PER BOX	BOX DIMENSION		BOX WEIGHT		STOCK IN AMERICA MSRP PRICING USD			
					mm	inch						
		mm	inch		W x D x H	W x D x H	KG	LB	METER	FOOT	EACH	BOX
50S	U95950SL27	2670	105 1/8"	20	2740 x 95 x 65	107 7/8" x 3 3/4" x 2 1/2"	6.50	14.33	6.384	1.946	17.045	340.906
50S	U95950SL39	3900	153 9/16"	20	3950 x 95 x 70	155 1/2" x 3 3/4" x 2 3/4"	11.00	24.25	6.222	1.896	24.266	485.316

CURVED "VELA" DOORS

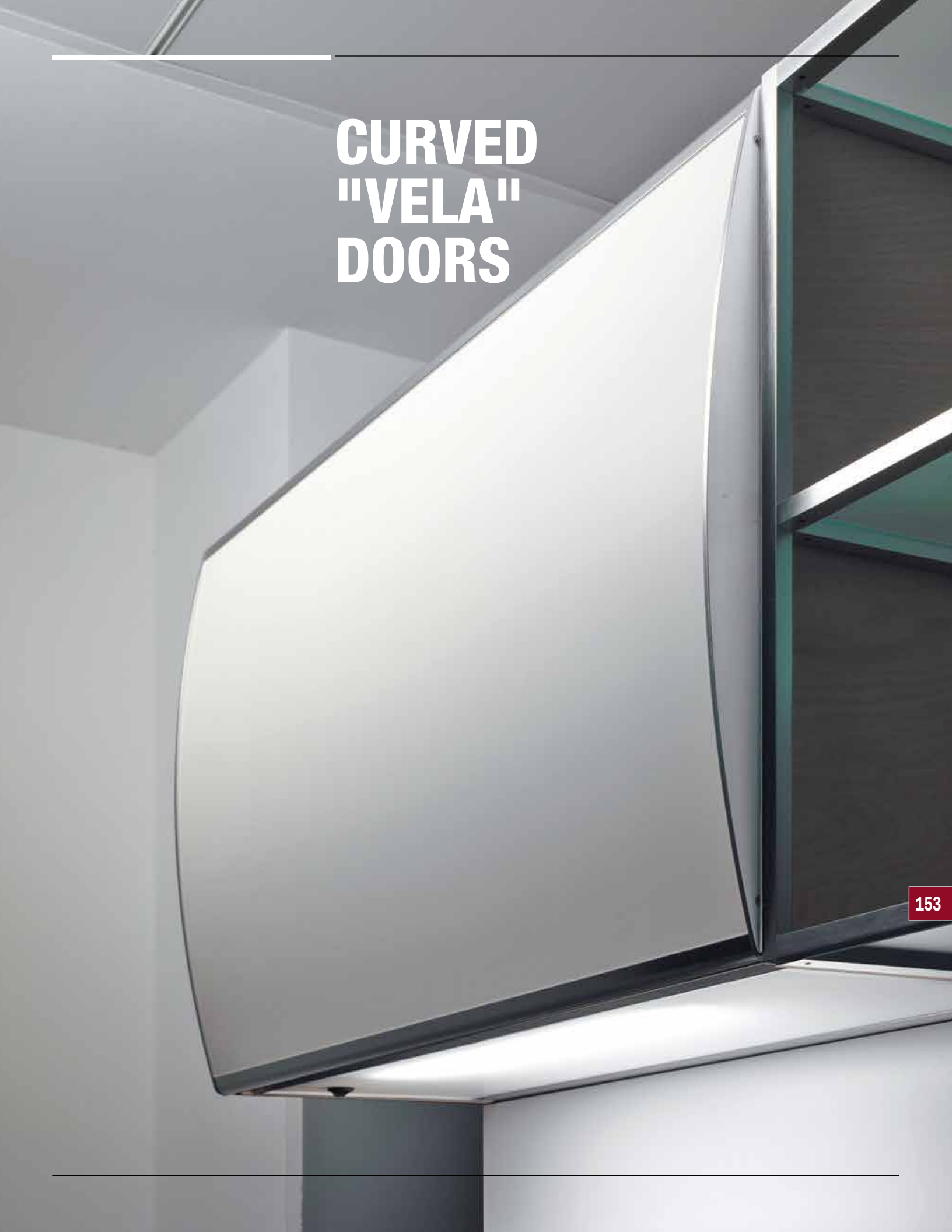

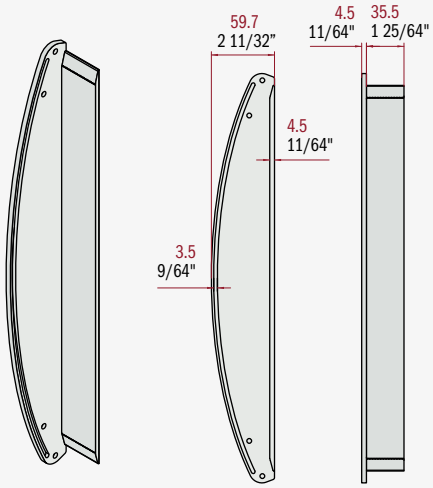

1634

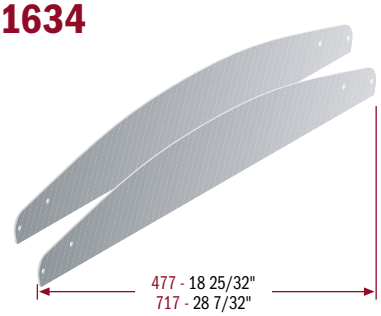

VELA DOOR ALUMINUM UPRIGHT KIT
2 Uprights + Screws per Kit
50S Aluminum Clear Anodize
Other Colors Available FROM ITALY

PORTE VELA ENSEMBLE DE MONTANTS EN ALUMINIUM
2 Montants + Vis par Ensemble
50S Aluminium Clair Anodisé
Autres Couleurs Disponibles DE L'ITALIE

PUERTA VELA KIT SUPERIOR EN ALUMINIO
2 Superiores + 2 Tornillos para el Kit
50S Aluminio Anodizado Claro
Otros Colores Disponibles DE ITALIA

COLORS	ITEM NUMBER	KIT PER BOX	BOX DIMENSION mm W x D x H	BOX DIMENSION inch W x D x H	BOX WEIGHT KG	BOX WEIGHT LB	STOCK IN AMERICA MSRP PRICING USD KIT	STOCK IN AMERICA MSRP PRICING USD BOX
50S	U163450S.0035	5	600 x 160 x 175	23 5/8" x 6 1/4" x 6 7/8"	5.00	11.02	145.130	725.650
50S	U163450S.0033	5	700 x 160 x 175	27 1/2" x 6 1/4" x 6 7/8"	7.40	16.31	177.294	886.470
50S	U163450S.0034	5	810 x 165 x 165	31 7/8" x 6 1/2" x 6 1/2"	7.70	16.98	182.954	914.770

2359G

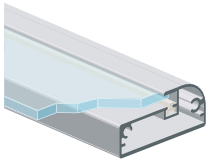

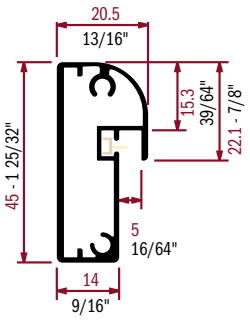

ALUMINUM PROFILE FOR VELA DOOR
50S Aluminum Clear Anodize
Other Colors and Lengths Available FROM ITALY

PROFILÉ EN ALUMINIUM POUR PORTE VELA
50S Aluminium Clair Anodisé
Autres Couleurs et Longueurs Disponibles DE L'ITALIE

PERFIL ALUMINIO PARA PUERTA VELA
50S Aluminio Anodizado Claro
Otros Colores y Dimensiones Disponibles DE ITALIA

COLORS	ITEM NUMBER	LENGTH mm	LENGTH inch	PCS PER BOX	BOX DIMENSION mm W x D x H	BOX DIMENSION inch W x D x H	BOX WEIGHT KG	BOX WEIGHT LB	STOCK IN AMERICA MSRP PRICING USD METER	FOOT	EACH	BOX
50S	U2359G50SL27	2670	105 1/8"	5	2740 x 120 x 90	107 7/8" x 4 3/4" x 3 1/2"	7.50	16.53	20.478	6.242	54.676	273.381
									AVAILABLE FROM ITALY MSRP PRICING USD			
50S	R2359G50SL39	3900	153 9/16''		<<<<< MINIMUM ORDER AND PACKAGING TO BE CONFIRMED >>>>>				17.941	5.468	69.970	

Can be used with any flexible surface within 1/8" - 3mm

BUMPERS, PLATES & SCREWS

175

SCREWS AND JOINTS
Diam. 5 complete metal joining screw.

VIS ET JOINTS
Vis de jonction diam. 5 complète en métal.

TORNILLOS Y UNIONES
Tornillo de union Ø 5 mm de metal completo.

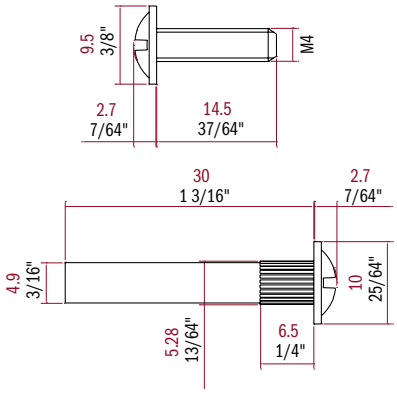

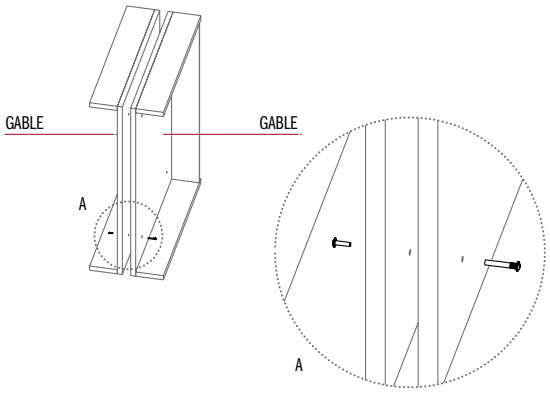

ITEM NUMBER	PAIRS PER BOX	BOX DIMENSION mm W x D x H	BOX DIMENSION inch W x D x H	BOX WEIGHT KG	BOX WEIGHT LB	STOCK IN AMERICA MSRP PRICING USD PAIR	STOCK IN AMERICA MSRP PRICING USD BOX
V175/FM/30/MS/15	2000	250 x 170 x 170	9 7/8" x 6 3/4" x 6 3/4"	8.30	18.30	0.161	322.000

226

SHOCK ABSORBERS
New double-material shock absorber with pin and under-head rigid Ø 5 mm, smooth rubber head. Particularly suitable for use with automatic machines.
Transparent Color

TAMPONS AMORTISSEURS
Nouveau tampon amortisseur double matériau avec pied et sous tête rigide Ø 5 mm, tête lisse en caoutchouc. Particulièrement adapté pour l'utilisation sur des machines automatiques.
Couleur Transparente

AMORTIGUADORES
Nuevo amortiguador bimaterial con pasador de Ø 5 mm, y parte bajo de la cabeza rigidos, cabeza lisa de goma. Particularmente adequado para colocacion con maquinas automaticas.
Color Transparente

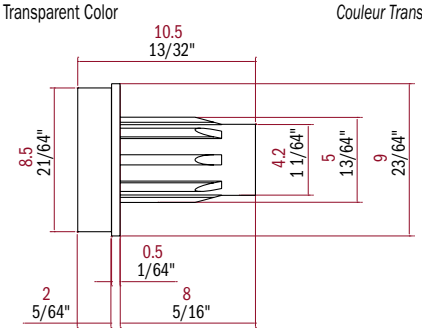

ITEM NUMBER	PCS PER BOX	BOX DIMENSION mm W x D x H	BOX DIMENSION inch W x D x H	BOX WEIGHT KG	BOX WEIGHT LB	STOCK IN AMERICA MSRP PRICING USD EACH	STOCK IN AMERICA MSRP PRICING USD BOX
V226/TL/TRA	1000	100 100 x 50	3 7/8" x 3 7/8" x 2"	0.30	0.66	0.125	125.000

VVE03

SCREWS AND JOINTS
Screw EURO TSP, diam. 6.3.

VIS ET JOINTS
Vis EURO TSP, diam. 6,3.

TORNILLOS Y UNIONES
Tornillo EURO TSP, diam. 6,3.

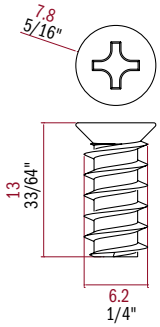

ITEM NUMBER	PCS PER BOX	BOX DIMENSION mm W x D x H	BOX DIMENSION inch W x D x H	BOX WEIGHT KG	BOX WEIGHT LB	STOCK IN AMERICA MSRP PRICING USD EACH	STOCK IN AMERICA MSRP PRICING USD BOX
VVE03	2500	240 x 140 x 100	9 1/2" x 5 1/2" x 3 7/8"	5.00	11.02	0.072	180.000

ALUMINUM TABLE FRAMES

MAKE IT EASY

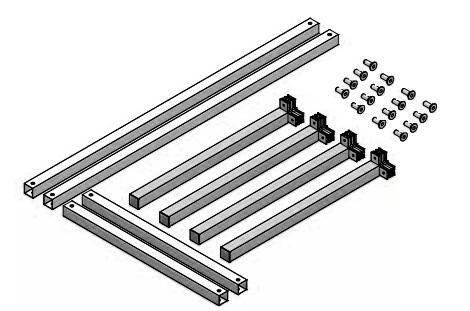

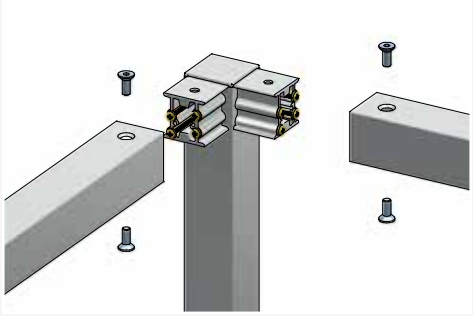

ALUMINUM TABLE FRAMES

STRUCTURE DE LA TABLE EN ALUMINIUM

TABLA ESTRUCTURA DE ALUMINIO

T7683

RAPIDO ALUMINUM TABLE SYSTEM
Fixed Model
50S Aluminum Clear Anodize
Available for Wood top
from 8 to 20 mm - 5/16" to 25/32"
and Glass top
from 8 to 12 mm - 5/16" to 15/32".
TOP NOT INCLUDED
Other Colors Available FROM ITALY

RAPIDO SYSTÈME DE TABLE EN ALUMINIUM
Model Fixe
50S Aluminium Clair Anodisé
Disponible pour panneau de bois
de 8 à 20 mm – 5/16" a 25/32"
et panneau de verre
de 8 à 12 mm – 5/16" to 15/32"
PANNEAU NON INCLUS
Autres Couleurs Disponibles DE L'ITALIE

RAPIDO SISTEMA MESAS DE ALUMINIO
Modelo Fijo
50S Aluminio Anodizado Claro
Disponible para tope o cubierta de madera
de 8 a 20 mm – 5/16" a 25/32"
or tope o cubierta de vidrio
de 8 to 12 mm – 5/16" a 25/32"
PANEL NO INCLUIDO
Otros Colores Disponibles DE ITALIA

COLORS	ITEM NUMBER	SIZE LENGHT x DEPHT x HEIGHT		PCS PER BOX	BOX DIMENSION		BOX WEIGHT		STOCK IN AMERICA MSRP PRICING USD	
					mm	inch				
		mm	inch		W x D x H	W x D x H	KG	LB	EACH	BOX
50S	UT768350S.008	1600 x 800 x 750	63" x 31 1/2" x 29 1/2"	1	1700 165 x 105	66 7/8" x 6 1/2" x 4 1/8"	8.50	18.74	443.833	443.833

T7684

RAPIDO ALUMINUM TABLE SYSTEM
Extensible Model
50S Aluminum Clear Anodize
Available for Wood Top Only from 8 to 20 mm - 5/16"to 25/32"
TOP NOT INCLUDED

RAPIDO SYSTÈME DE TABLE EN ALUMINIUM
Model Extensible
50S Aluminium Clair Anodisé
Disponible pour Panneau de Bois Seulement
de 8 à 20 mm - 5/16 "à 25/32"
PANNEAU NON INCLUS

RAPIDO SISTEMA DE MESAS EN ALUMINIO
Modelo Extensible
50S Aluminio Anodizado Claro
Disponible para tope o cubierta de madera
únicamente de 8 a 20 mm - 5/16 "a 25/32"
PANEL NO INCLUIDO

COLORS	ITEM NUMBER	SIZE LENGHT x DEPHT x HEIGHT+EXTENSIONS		PCS PER BOX	BOX DIMENSION		BOX WEIGHT		STOCK IN AMERICA MSRP PRICING USD	
					mm	inch				
		mm	inch		W x D x H	W x D x H	KG	LB	EACH	BOX
50S	UT768450S.002	1600 x 800 x 750 +700	63" x 31 1/2" x 29 1/2" + 27 9/16"	1	1700 165 x 105	66 7/8" x 6 1/2" x 4 1/8"	9.50	20.94	512.511	512.511

Aluminum Clear Anodize *Aluminium Clair Anodisé* Aluminio Anodizado Claro

Aluminum White Semi-Gloss Powder Coated *Aluminium Blanc Semi-Lustre Peint à Poudre* Aluminio Blanco Semi-Brillo Barnizado

Aluminum Titanium Anodize *Aluminium Titanium Anodisé* Aluminio Anodizado Titanio

Aluminum Black Matt Powder Coated *Aluminium Noir Mat Peint à Poudre* Aluminio Negro Mate Barnizado

Aluminum Stainless Anodize *Aluminium Inox Anodisé* Aluminio Anodizado Inox

Aluminum Chrome Anodize *Aluminium Chrome Anodisé* Aluminio Anodizado Cromo

Notes

Conversion Table

1" = 25.4 millimeters 1 millimeters = 0.3937"

inch		mm
1/64"	0.0156"	0.397
1/32"	0.0313"	0.794
3/64"	0.0469"	1.191
1/16"	0.0625"	1.588
5/64"	0.0781"	1.984
3/32"	0.0938"	2.381
7/64"	0.1094"	2.778
1/8"	0.1250"	3.175
9/64"	0.1406"	3.572
5/32"	0.1563"	3.969
11/64"	0.1719"	4.366
3/16"	0.1875"	4.763
13/64"	0.2031"	5.159
7/32"	0.2188"	5.556
15/64"	0.2344"	5.953
1/4"	0.2500"	6.350

inch		mm
17/64"	0.2656"	6.747
9/32"	0.2813"	7.144
19/64"	0.2969"	7.541
5/16"	0.3125"	7.938
21/64"	0.3281"	8.334
11/32"	0.3438"	8.731
23/64"	0.3594"	9.128
3/8"	0.3750"	9.525
25/64"	0.3906"	9.922
13/32"	0.4063"	10.319
27/64"	0.4219"	10.716
7/16"	0.4375"	11.113
29/64"	0.4531"	11.509
15/32"	0.4688"	11.906
31/64"	0.4844"	12.303
1/2"	0.5000"	12.700

inch		mm
33/64"	0.5156"	13.097
17/32"	0.5313"	13.494
35/64"	0.5469"	13.891
9/16"	0.5625"	14.288
37/64"	0.5781"	14.684
19/32"	0.5938"	15.081
39/64"	0.6094"	15.478
5/8"	0.6250"	15.875
41/64"	0.6406"	16.272
21/32"	0.6563"	16.669
43/64"	0.6719"	17.066
11/16"	0.6875"	17.463
45/64"	0.7031"	17.859
23/32"	0.7188"	18.256
47/64"	0.7344"	18.653
3/4"	0.7500"	19.050

inch		mm
49/64"	0.7656"	19.447
25/32"	0.7813"	19.844
51/64"	0.7969"	20.241
13/16"	0.8125"	20.638
53/64"	0.8281"	21.034
27/32"	0.8438"	21.431
55/64"	0.8594"	21.828
7/8"	0.8750"	22.225
57/64"	0.8906"	22.622
29/32"	0.9063"	23.019
59/64"	0.9219"	23.416
15/16"	0.9375"	23.813
61/64"	0.9531"	24.209
31/32"	0.9688"	24.606
63/64"	0.9844"	25.003
1"	1.0000"	25.400

The following General Terms and Conditions of Sale ("Terms and Conditions") govern the sales of kitchen components, accessories and related products ("Product") by Scilm America, Inc. ("Scilm America") to you ("Buyer"). Any term or condition in any order, confirmation or other document furnished by Buyer which is additional to, different from, or conflicting with these Terms and Conditions is expressly rejected and will not be binding upon Scilm America unless specifically agreed to in writing by Scilm America.

1. **ACCEPTANCE OF ORDERS.** All orders of Buyer are subject to Scilm America's written acknowledgment ("Order Acknowledgment").

2. **CANCELLATION OF ORDERS**. Scilm America's Order Acknowledgments are final and binding. Orders may not be cancelled without the prior written consent of Scilm America.

3. **PRICES.** Prices are as stated on Scilm America's Order Acknowledgment.

4. **PAYMENT.** Payment terms are as stated on Scilm America's Order Acknowledgment. Interest in the amount of 1% per month (12% per year) or the highest rate allowed by law, whichever is less, shall apply on all past due balances until such balances are fully paid. Should it become necessary for Scilm America to collect any past due balances by legal proceedings or otherwise, Buyer agrees to pay all costs of collection, including, without limitation, reasonable attorney's fees and court costs, incurred by Scilm America.

5. **SHIPPING.** Shipping terms are as stated on Scilm America's Order Acknowledgment. Unless otherwise agreed in writing by Scilm America (i) Buyer shall make all arrangements (and shall pay all costs) for the transportation and handling of the Product, (ii) delivery shall be deemed complete and title and risk of loss or damage to the Product shall pass to Buyer upon acceptance of shipment by a carrier, subject to Scilm America's right to be paid in full, (iii) Scilm America shall not be responsible to obtain and/or maintain for the account of Buyer any insurance against loss or damage to the Product in transit and the cost of any such insurance shall be borne by Buyer.

6. **DELIVERY.** The delivery dates set forth in Scilm America's Order Acknowledgments are estimates only. Scilm America shall make commercially reasonable efforts to deliver the Product in accordance with these dates; provided, however, that Scilm America shall not be liable for failure to deliver the Product as estimated.

7. **CLAIMS.** All claims against Scilm America for defects, errors or shortages must be made by Buyer in writing and notified to Scilm America within ten (10) days of receipt of the Product by Buyer. Failure by Buyer to make any claim against Scilm America within ten (10) days of receipt of the Product shall be deemed acceptance of the Product and a waiver of any and all defects, errors or shortages. Notwithstanding the foregoing, any use or transfer of the Product by Buyer, its agents, employees, contractors or licensees, for any purpose, after delivery thereof, shall constitute acceptance of that Product by Buyer.

8. **RETURNS OR EXCHANGES.** All sales of Product are final. No Product may be returned or exchanged without the prior written consent of Scilm America.

9. **INTELLECTUAL PROPERTY RIGHTS.** Any sale of Product hereunder shall not convey any express or implied license under any patent, copyright, trademark or other proprietary rights owned or controlled by Scilm America, whether relating to the Product or any manufacturing process or other matter. All rights under any such patent, copyright, trademark or other proprietary rights are expressly reserved by Scilm America. Buyer shall indemnify, hold harmless and defend Scilm America against any claim, loss, damage, expense and cost, including, without limitation, reasonable attorney's fees, resulting from or otherwise relating to any claimed infringement of patent, copyright, trademark or other proprietary rights arising out of compliance by Scilm America with Buyer's designs, specifications and instructions.

10. **DISCLAIMER OF WARRANTIES. SCILM AMERICA MAKES NO WARRANTY TO BUYER AND BUYER'S CUSTOMERS THAT THE PRODUCT DELIVERED TO BUYER HEREUNDER IS MERCHANTABLE OF FIT FOR ANY PARTICULAR PURPOSE, AND THERE ARE NO WARRANTIES, EXPRESS OR IMPLIED, WHICH EXTEND BEYOND THE DESCRIPTION OF THE PRODUCT CONTAINED ON SCILM AMERICA'S ORDER ACKNOWLEDGMENT. SCILM AMERICA MAKES NO WARRANTY TO BUYER AND BUYER'S CUSTOMERS THAT THE PRODUCT IS DELIVERED FREE OF THE RIGHTFUL CLAIM OF ANY THIRD PERSON BY WAY OF INFRINGEMENT OR THE LIKE.**

11. **LIMITATION OF LIABILITY. SCILM AMERICA'S LIABILITY IN DAMAGES OR OTHERWISE SHALL IN NO EVENT EXCEED IN THE AGGREGATE THE TOTAL PURCHASE PRICE, IF ANY, RECEIVED BY SCILM AMERICA FOR THE PRODUCT. IN NO EVENT SHALL SCILM AMERICA BE LIABLE FOR ANY INDIRECT, INCIDENTAL OR CONSEQUENTIAL DAMAGES, WHETHER BASED ON CONTRACT, INDEMNITY, WARRANTY, MISREPRESENTATION, TORT, NEGLIGENCE, STRICT LIABILITY OR ANY OTHER THEORY. THE FOREGOING LIMITATIONS APPLY TO BOTH BUYER AND BUYER'S CUSTOMERS.**

12. **FORCE MAJEURE.** Scilm America shall not be liable for any loss, damage, delay or failure to perform, in whole or in part, resulting from causes beyond the control of either Scilm America or Scilm America's suppliers, including, without limitation, acts of God, war, acts of terrorism, insurrections, riots, embargoes, fires, strikes, delays in transportation, inability to obtain supplies of raw materials, blackouts or governmental laws, regulations, orders or actions.

13. **PRODUCT SAFETY.** Buyer shall be solely responsible for compliance with all laws, rules, regulations and industry safety standards applicable to the distribution, sale and use of the Product supplied by Scilm America. Buyer shall cause all individuals and entities buying or otherwise obtaining the Product from Buyer to comply with such laws, rules, regulations and industry safety standards. Buyer shall indemnify, hold harmless and defend Scilm America against any claim, loss, damage, expense and cost, including, without limitation, reasonable attorney's fees and court costs, resulting from or otherwise relating to any claimed failure by Buyer to comply or cause any individual or entity to comply with such laws, rules, regulations and industry safety standards.

14. **EXPORT CONTROL.** Buyer shall comply fully with all administration and export control laws and regulations of the U.S. government as may be applicable to the export, resale or other disposition of any Product purchased from Scilm America.

15. **APPLICABLE LAW.** The laws of the State of New York (without giving effect to its conflicts of law principles) govern all matters arising out of or relating to these Terms and Conditions, including, without limitation, its validity, interpretation, construction, performance, and enforcement. With respect to international sales, the parties agree that the United Nations Convention on Contracts for the International Sale of Goods does not apply to these Terms and Conditions.

16. **DISPUTES.** Any party bringing any legal action or proceeding against the other party arising out of or relating to these Terms and Conditions shall bring such legal action or proceeding in the United States District Court for the Southern District of New York or in any court of the State of New York sitting in New York City. Notwithstanding the foregoing, any controversy or claim, including, without limitation, any controversy or claim based on misrepresentation, negligence or strict liability, arising out of or relating to these Terms and Conditions, which involves an amount in excess of $50,000, exclusive of interest and costs, shall be settled by arbitration in the City of New York, State of New York, in accordance with the rules of the American Arbitration Association then in effect. The arbitration is to be held before a single arbitrator. The decision in such arbitration shall be final and binding and any award rendered thereon may be entered in any court having jurisdiction.

17. **NOTICES.** Any notice required or permitted to be given under these Terms and Conditions shall be made in writing and shall be deemed to have been given (i) if personally delivered, or (ii) if sent by registered or certified mail, postage prepaid, return receipt requested, or (iii) if sent by nationally or internationally recognized delivery service, or (iv) if sent by facsimile, to the address and fax number indicated by Scilm America in its first Order Acknowledgment and by Buyer in its first order to Scilm America. Notices shall be deemed to have been received (i) immediately, if personally delivered, or (ii) upon receipt as indicated by the date on the signed receipt, if sent by registered or certified mail, postage prepaid, return receipt requested, or by nationally or internationally recognized delivery service, or (iii) upon receipt by the party giving the notice of a transmission report generated by the machine from which the facsimile was sent indicating that the facsimile was sent in its entirety to the addressee's facsimile number, if sent by facsimile. Either party may from time to time change the address or fax number to which notices to it shall be given by giving notice of such change to the other party in the manner provided for herein.

18. **GENERAL PROVISIONS.** These Terms and Conditions and Scilm America's Order Acknowledgments constitute the final and integrated agreement of Scilm America and Buyer and supersede all prior negotiations, proposals, quotations, proforma invoices, understandings and agreements (except any prior written commercial credit agreement in effect between the parties), whether oral or written, relating to the Product or the subject matter of these Terms and Conditions. Any representation, warranty, course of dealing or trade usage not expressly contained or referenced herein shall no be binding upon Scilm America. No modification, amendment, rescission, waiver or other change in these Terms of Sale shall be binding upon Scilm America unless specifically agreed to in writing by Scilm America. The invalidity or unenforceability, in whole or in part, of any provision herein shall not affect the validity or enforceability of any other provision herein. Failure or delay on the part of Scilm America to exercise any right, power, privilege or remedy herein shall not constitute a waiver hereof. The section headings contained herein are for convenience of reference only and are not to be used in the construction or interpretation of these Terms and Conditions. All words used herein shall be construed to be of such gender and number as the circumstances require.

ACCEPTED AND AGREED

COMPANY: _____

NAME: _____

TITLE: _____

DATE: _____

SIGNATURE: _____

scilm®
AMERICA
furniture technology for kitchens

SCILM AMERICA HAS THE RIGHT TO INTRODUCE MODIFICATIONS WITHOUT NOTICE
SCILM AMERICA A LE DROIT D'APPORTER DES MODIFICATIONS SANS PRÉAVIS
SCILM AMERICA TIENE EL DERECHO DE INTRODUCIR MODIFICACIONES SIN PREVIO AVISO

Photo credit: Armony Cucine spa
Graphic: Bassodesign

Printed on Recycled Paper

scilm-america

scilmamerica

@scilmamerica

scilm america inc.
1835 E HALLANDALE BCH BLVD - SUITE 590 - HALLANDALE BEACH
FL 33009, USA
T 954.323.0123 - F 954.281.5434
info@scilmamerica.com - www.scilmamerica.com

scilm®
AMERICA
furniture technology for kitchens

scilmamerica.com