FACE FRAME BRACKET

STAINLESS

FFCB-HG-1

- Works with items below on face frame cabinets:
  - LIN-X
  - 304B Hinges (with 304B-P4A-32)
  - 230 Hinges (with 230-P4W-32T)
- Sold per piece.
- Please specify the quantity of brackets necessary when ordering: 1 bracket is needed for each arm (LIN-X) or hinge (304B, 230).

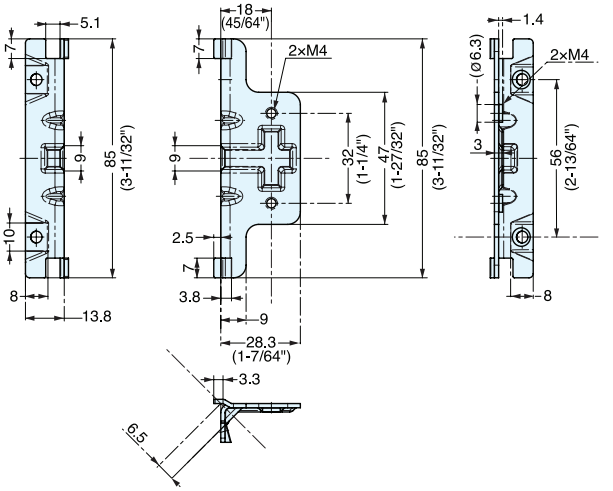

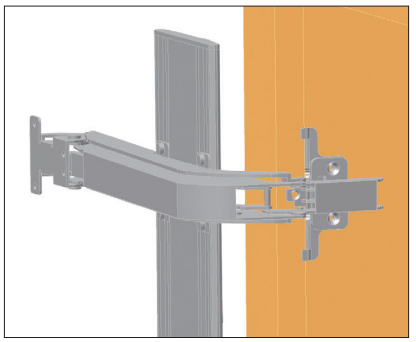

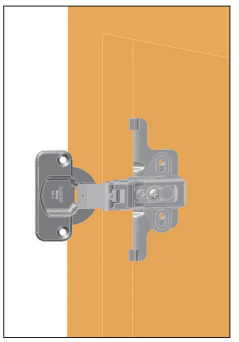

Material	Finish
304 Stainless Steel	Polished

FACE FRAME BRACKET

STEEL

FFCB-SLS

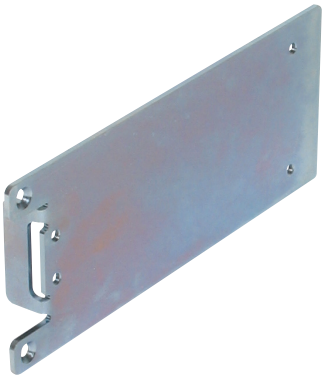

- Works with SLS-ELAN Series on face frame cabinets.
- Sold per piece.
- Please specify the quantity of brackets necessary when ordering: 1 bracket is needed for each stay.

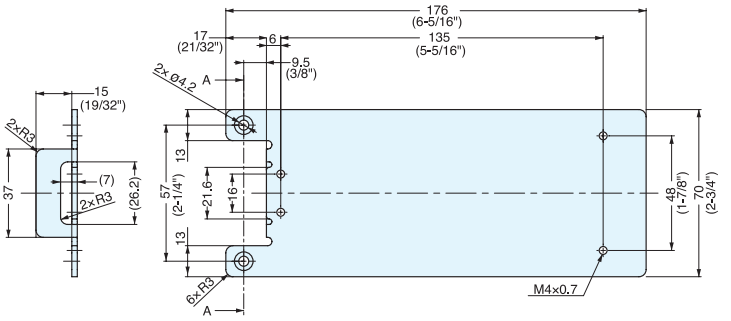

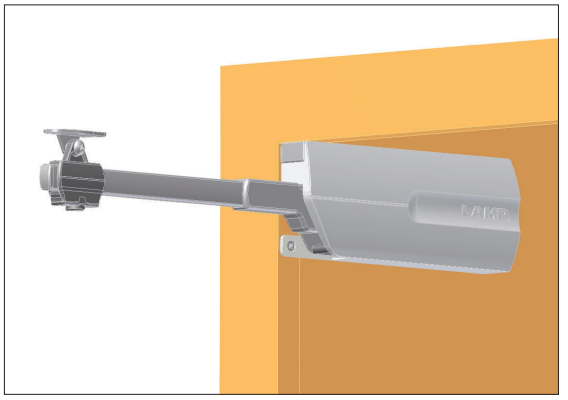

Material	Finish
Steel	Chromate